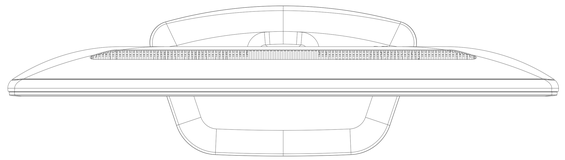

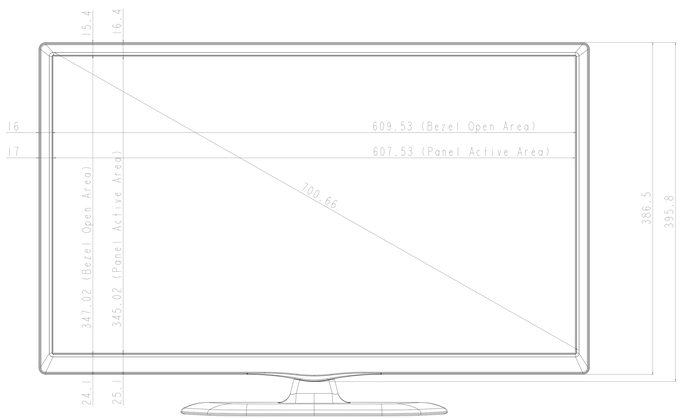
15.4
16.4
16
17
609.53 (Bezel Open Area)
607.53 (Panel Active Area)
700.66
347.02 (Bezel Open Area)
345.02 (Panel Active Area)
24.1
25.1
386.5
395.8

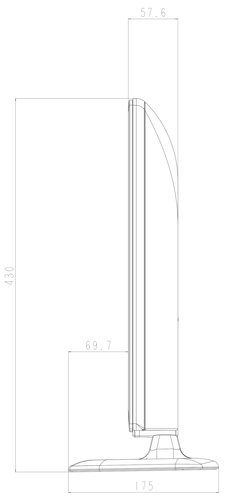
57.6
430
69.7
175

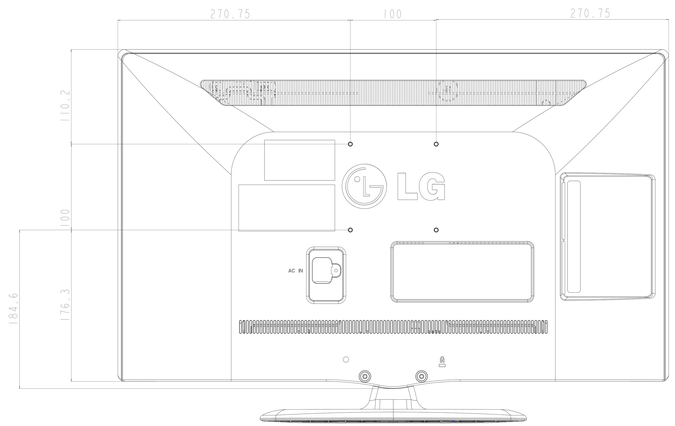
270.75
100
270.75
110.2
100
184.6
176.3
LG
AC IN

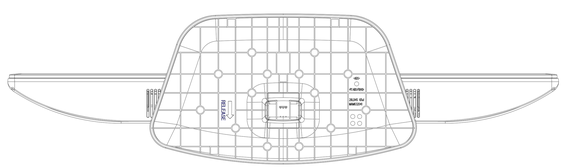
VESA