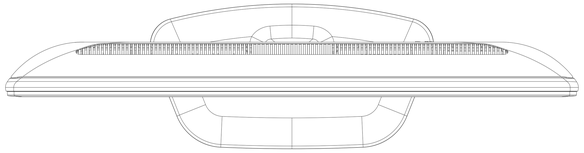

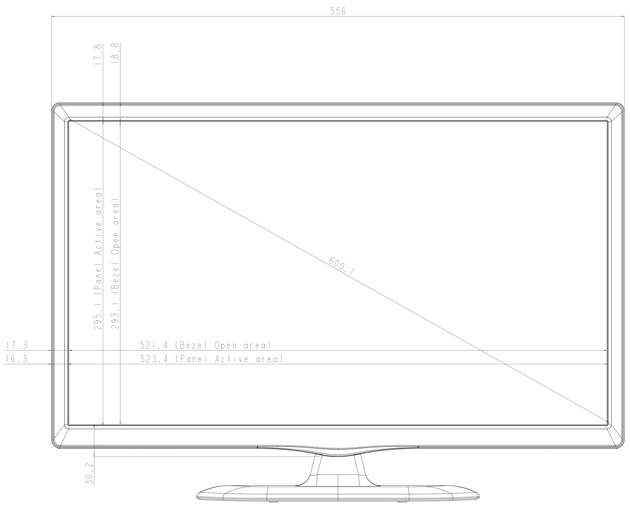
556
17.8
18.8
295.1 (Panel Active area)
293.1 (Bezel Open area)
600.1
17.3
16.3
521.4 (Bezel Open area)
523.4 (Panel Active area)
30.2

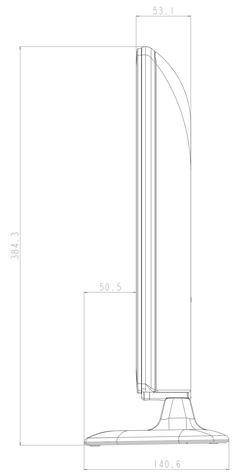
53.1
384.3
50.5
140.6

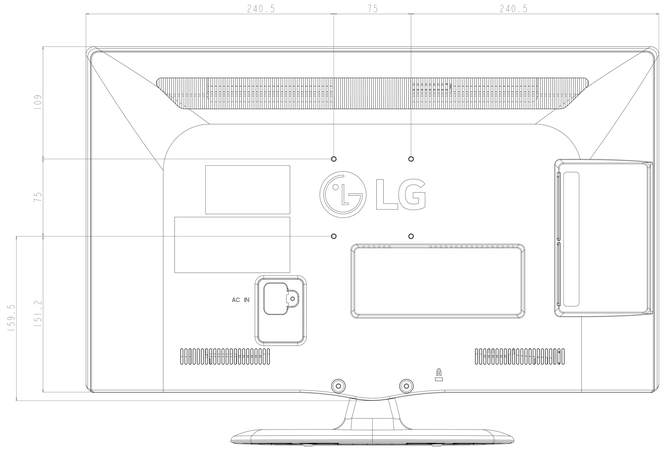
240.5
75
240.5
109
75
159.5
151.2
LG
AC IN

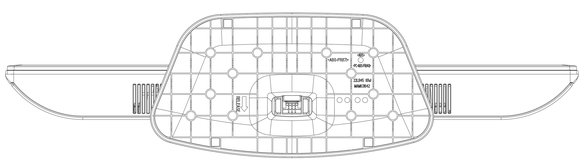
D-SUB 15p
HDMI,DVI