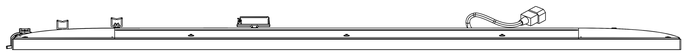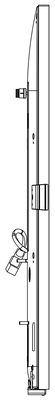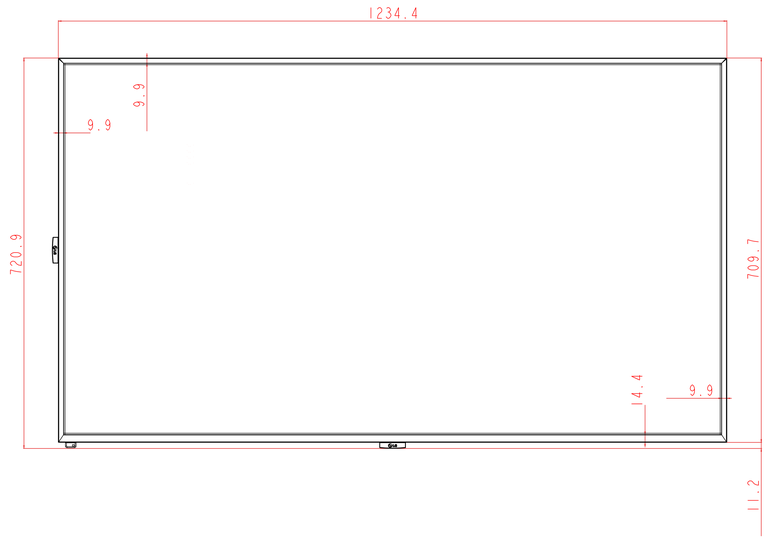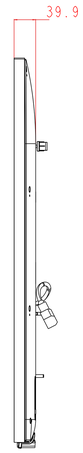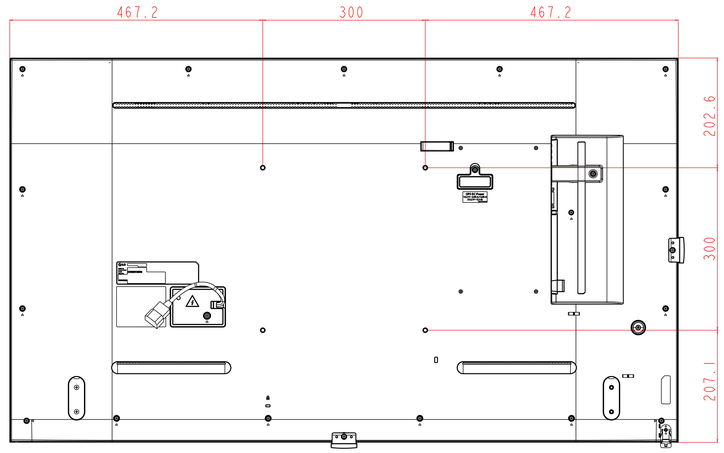55UH5F Set Dimension	
Model	55UM3F, 55UM3DF,55UH5F, 55UH7F
Scale	1/2
Unit	MM