LG
Life's Good

OWNER'S MANUAL
LED LCD TV

Please read this manual carefully before operating your set and retain it for future reference.

LM96**

P/NO : MFL67441727 (1210-REV03)
Printed in Korea

www.lg.com

ENGLISH

TABLE OF CONTENTS

3 **LICENSES**

3 **OPEN SOURCE SOFTWARE NOTICE**

4 **SAFETY INSTRUCTIONS**

10 Viewing 3D Imaging

12 **INSTALLATION PROCEDURE**

12 **ASSEMBLING AND PREPARING**

12 Unpacking
15 Separate purchase
16 Parts and buttons
17 Lifting and moving the TV
18 Setting up the TV
18 - Attaching the stand
20 - Mounting on a table
21 - Mounting on a wall
22 - Tidying cables

24 **MAKING CONNECTIONS**

24 Antenna connection
25 HDMI connection
26 DVI to HDMI connection
26 MHL connection
27 RGB-PC connection
27 Component connection
28 Composite connection
28 Audio connection
28 - Digital optical audio connection
29 USB connection

30 **MAGIC REMOTE CONTROL FUNCTIONS**

31 Registering magic remote control
31 How to use magic remote control
31 Precautions to take when using the magic remote control

32 **REMOTE CONTROL**

33 **USING THE USER GUIDE**

34 **MAINTENANCE**

34 Cleaning Your TV
34 - Screen, frame, cabinet and stand
34 - Power cord

34 **TROUBLESHOOTING**

35 **SPECIFICATIONS**

WARNING

- If you ignore the warning message, you may be seriously injured or there is a possibility of accident or death.

CAUTION

- If you ignore the caution message, you may be slightly injured or the product may be damaged.

NOTE

- The note helps you understand and use the product safely. Please read the note carefully before using the product.

LICENSES

Supported licenses may differ by model. For more information about licenses, visit *www.lg.com*.

Manufactured under license from Dolby Laboratories. “Dolby” and the double-D symbol are trademarks of Dolby Laboratories.

HDMI, the HDMI logo and High-Definition Multimedia Interface are trademarks or registered trademarks of HDMI Licensing LLC.

ABOUT DIVX VIDEO: DivX® is a digital video format created by DivX, LLC, a subsidiary of Rovi Corporation. This is an official DivX Certified® device that plays DivX video. Visit divx.com for more information and software tools to convert your files into DivX video.

ABOUT DIVX VIDEO-ON-DEMAND: This DivX Certified® device must be registered in order to play purchased DivX Video-on-Demand (VOD) movies. To obtain your registration code, locate the DivX VOD section in your device setup menu. Go to vod.divx.com for more information on how to complete your registration.

“DivX Certified® to play DivX® video up to HD 1080p, including premium content.”

“DivX®, DivX Certified® and associated logos are trademarks of Rovi Corporation or its subsidiaries and are used under license.”

“Covered by one or more of the following U.S. patents:
7,295,673; 7,460,668; 7,515,710; 7,519,274”

Manufactured under license under U.S. Patent Nos: 5,956,674; 5,974,380; 6,487,535 & other U.S. and worldwide patents issued & pending. DTS, the Symbol & DTS and the Symbol together are registered trademarks & DTS 2.0+Digital Out is a trademark of DTS, Inc. Product includes software. © DTS, Inc. All Rights Reserved.

OPEN SOURCE SOFTWARE NOTICE

To obtain the source code under GPL, LGPL, MPL and other open source licenses, that is contained in this product, please visit *http://opensource.lge.com*.
In addition to the source code, all referred license terms, warranty disclaimers and copyright notices are available for download.
LG Electronics will also provide open source code to you on CD-ROM for a charge covering the cost of performing such distribution (such as the cost of media, shipping and handling) upon email request to opensource@lge.com. This offer is valid for three (3) years from the date on which you purchased the product.

ENGLISH

SAFETY INSTRUCTIONS

Please read these safety precautions carefully before using the product.

WARNING

- Do not place the TV and remote control in the following environments:
  - » A location exposed to direct sunlight
  - » An area with high humidity such as a bathroom
  - » Near any heat source such as stoves and other devices that produce heat
  - » Near kitchen counters or humidifiers where they can easily be exposed to steam or oil
  - » An area exposed to rain or wind
  - » Near containers of water such as vases

  Otherwise, this may result in fire, electric shock, malfunction or product deformation.

- Do not place the product where it might be exposed to dust.
  This may cause a fire hazard.

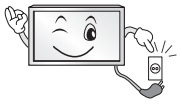

- Mains plug is the disconnecting device. The plug must remain readily operable.

- Do not touch the power plug with wet hands. Additionally, if the cord pin is wet or covered with dust, dry the power plug completely or wipe dust off.
  You may be electrocuted due to excess moisture.

- Make sure to connect the power cable to the grounded current. (Except for devices which are not grounded.)
  You may be electrocuted or injured.

- Fix the power cable completely.
  If the power cable is not fixed completely, a fire can break out.

- Ensure the power cord does not come into contact with hot objects such as a heater.
  This may cause a fire or an electric shock hazard.

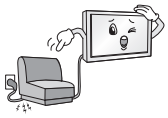

- Do not place a heavy object, or the product itself, on power cables.
  Otherwise, this may result in fire or electric shock.

- Bend antenna cable between inside and outside building to prevent rain from flowing in.
  This may cause water damaged inside the Product and could give an electric shock.

WARNING

- When mounting a TV it on the wall, make sure not to install TV by hanging power and signal cables on the back of the TV.
  It may cause fire, electric shock.

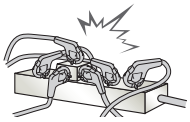

- Do not plug too many electrical devices into a single multiple electrical outlet. Otherwise, this may result in fire due to over-heating.

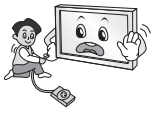

- Do not drop the product or let it fall over when connecting external devices. Otherwise, this may result in injury or damage to the product.

- Keep the packing anti-moisture material or vinyl packing out of the reach of children. Anti-moisture material is harmful if swallowed. If swallowed by mistake, force the patient to vomit and visit the nearest hospital. Additionally, vinyl packing can cause suffocation. Keep it out of the reach of children.

- Do not let your children climb or cling onto the TV.
  Otherwise, the TV may fall over, which may cause serious injury.

- Dispose of used batteries carefully to protect a child from eating them.
  Please seek Doctor- Medical Attention immediately if child consumes batteries.

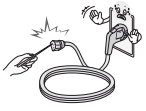

- Do not insert any metal objects/conductors (like a metal chopstick/cutlery/ screwdriver) between power cable plug and input Wall Socket while it is connected to the input terminal on the wall. Additionally, do not touch the power cable right after plugging into the wall input terminal.
  You may be electrocuted.
  (Depending on model)

- Do not put or store inflammable substances near the product.
  There is a danger of combustion/explosion or fire due to careless handling of the inflammable substances.

- Do not drop metallic objects such as coins, hair pins, chopsticks or wire into the product, or inflammable objects such as paper and matches. Children must pay particular attention.
  Electrical shock, fire or injury can occur. If a foreign object is dropped into the product, unplug the power cord and contact the service centre.

- Do not spray water on the product or scrub with an inflammable substance (thinner or benzene). Fire or electric shock accident can occur.

- Do not allow a impact shock or any objects to fall into the product, and do not drop onto the screen with something.
  You may be injured or the product can be damaged.

ENGLISH

WARNING

- Never touch this product or antenna during a thunder or lighting storm.
  You may be electrocuted.

- Never touch the wall outlet when there is leakage of gas, open the windows and ventilate.
  It may cause a fire or a burn by a spark.

- Do not disassemble, repair or modify the product at your own discretion.
  Fire or electric shock accident can occur.
  Contact the service center for check, calibration or repair.

- If any of the following occur, unplug the product immediately and contact your local service centre.
  » The product has been impacted by shock
  » The product has been damaged
  » Foreign objects have entered the product
  » The product produced smoke or a strange smell
  This may result in fire or electric shock.

- If you don't intend to use the product for a long time, unplug the power cable from the product.
  Covering dust can cause a fire, or insulation deterioration can cause electric leakage, electric shock or fire.

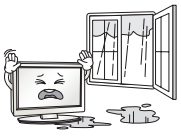

- Apparatus shall not be exposed to dripping or splashing and no objects filled with liquids, such as vases, shall be placed on the apparatus.

CAUTION

- Install the product where no radio wave occurs.

- There should be enough distance between an outside antenna and power lines to keep the former from touching the latter even when the antenna falls.
  This may cause an electric shock.

- Do not install the product on places such as unstable shelves or inclined surfaces. Also avoid places where there is vibration or where the product cannot be fully supported.
  Otherwise, the product may fall or flip over, which may cause injury or damage to the product.

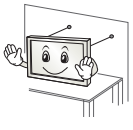

- If you install the TV on a stand, you need to take actions to prevent the product from overturning. Otherwise, the product may fall over, which may cause injury.

CAUTION

- If you intend to mount the product to a wall, attach VESA standard mounting interface (optional parts) to the back of the product. When you install the set to use the wall mounting bracket (optional parts), fix it carefully so as not to drop.
- Only use the attachments / accessories specified by the manufacturer.

- When installing the antenna, consult a qualified service man.
  This may create a fire hazard or an electric shock hazard.

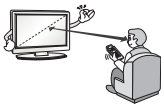

- We recommend that you maintain a distance of at least 2 to 7 times the diagonal screen size when watching TV.
  If you watch TV for a long period of time, this may cause blurred vision.

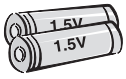

- Only use the specified type of battery.
  This could cause damage to the remote control.

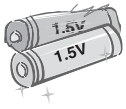

- Do not mix new batteries with old batteries.
  This may cause the batteries to overheat and leak.

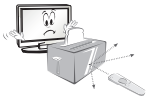

- Make sure there are no objects between the remote control and its sensor.

- Signal from the remote control may be disturbed by sun light or other strong light. In this case, darken the room.

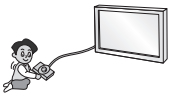

- When connecting external devices such as video game consoles, make sure the connecting cables are long enough.
  Otherwise, the product may fall over, which may cause injury or damage the product.

- Do not turn the product On/Off by plugging-in or unplugging the power plug to the wall outlet. (Do not use the power plug for switch.)
  It may cause mechanical failure or could give an electric shock.

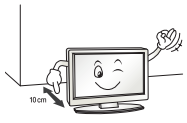

- Please follow the installation instructions below to prevent the product from overheating.
  » The distance between the product and the wall should be more than 10 cm.
  » Do not install the product in a place with no ventilation (e.g., on a bookshelf or in a cupboard).
  » Do not install the product on a carpet or cushion.
  » Make sure the air vent is not blocked by a tablecloth or curtain.
  Otherwise, this may result in fire.

CAUTION

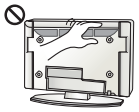

- Take care not to touch the ventilation openings when watching the TV for long periods as the ventilation openings may become hot. This does not affect the operation or performance of the product.

- Periodically examine the cord of your appliance, and if its appearance indicates damage or deterioration, unplug it, discontinue use of the appliance, and have the cord replaced with an exact replacement part by an authorized servicer.

- Prevent dust collecting on the power plug pins or outlet.
  This may cause a fire hazard.

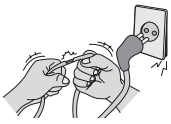

- Protect the power cord from physical or mechanical abuse, such as being twisted, kinked, pinched, closed in a door, or walked upon. Pay particular attention to plugs, wall outlets, and the point where the cord exits the appliance.

- Do not press strongly upon the panel with a hand or sharp object such as nail, pencil or pen, or make a scratch on it.

- Avoid touching the screen or holding your finger(s) against it for long periods of time. Doing so may produce some temporary distortion effects on the screen.

- When cleaning the product and its components, unplug the power first and wipe it with a soft cloth. Applying excessive force may cause scratches or discolouration. Do not spray with water or wipe with a wet cloth. Never use glass cleaner, car or industrial shiner, abrasives or wax, benzene, alcohol etc., which can damage the product and its panel.
  Otherwise, this may result in fire, electric shock or product damage (deformation, corrosion or breakage).

- As long as this unit is connected to the AC wall outlet, it is not disconnected from the AC power source even if you turn off this unit by SWITCH.

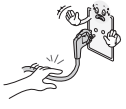

- When unplugging the cable, grab the plug and unplug it.
  If the wires inside the power cable are disconnected, this may cause fire.

- When moving the product, make sure you turn the power off first. Then, unplug the power cables, antenna cables and all connecting cables.
  The TV set or power cord may be damaged, which may create a fire hazard or cause electric shock.

- When moving or unpacking the product, work in pairs because the product is heavy. Otherwise, this may result in injury.

CAUTION

- Contact the service center once a year to clean the internal parts of the product. Accumulated dust can cause mechanical failure.

- Refer all servicing to qualified service personnel. Servicing is required when the apparatus has been damaged in any way, such as power supply cord or plug is damaged, liquid has been spilled or objects have fallen into the apparatus, the apparatus has been exposed to rain or moisture, does not operate normally, or has been dropped.

- If the product feels cold to the touch, there may be a small “flicker” when it is turned on. This is normal, there is nothing wrong with product.

- The panel is a high technology display product with resolution of two million to six million pixels. You may see tiny black dots and/or brightly coloured dots (red, blue or green) at a size of 1 ppm on the panel. This does not indicate a malfunction and does not affect the performance and reliability of the product.
  This phenomenon also occurs in third-party products and is not subject to exchange or refund.

- You may find different brightness and colour of the panel depending on your viewing position(left/right/top/down).
  This phenomenon occurs due to the characteristic of the panel. It is not related with the product performance, and it is not malfunction.

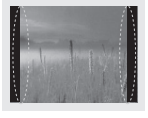

- Displaying a still image (e.g., broadcasting channel logo, on-screen menu, scene from a video game) for a prolonged time may cause damage to the screen, resulting in retention of the image, which is known as image sticking. The warranty does not cover the product for image sticking.
  Avoid displaying a fixed image on your television’s screen for a prolonged period (2 or more hours for LCD, 1 or more hours for Plasma).
  Also, if you watch the TV at a ratio of 4:3 for a long time, image sticking may occur on the borders of the panel.
  This phenomenon also occurs in third-party products and is not subject to exchange or refund.

- If an image remains still for a while, the screen may become dim in order to minimize the power consumption. The screen gets brighter again when you operate the remote control or a different image appears.
  (Only 84LM96**)

- **Generated Sound**
  “Cracking” noise: A cracking noise that occurs when watching or turning off the TV is generated by plastic thermal contraction due to tempera-ture and humidity. This noise is common for products where thermal deformation is required. Electrical circuit humming/panel buzzing: A low level noise is generated from a high-speed switching circuit, which supplies a large amount of current to operate a product. It varies depend-ing on the product.
  This generated sound does not affect the performance and reliability of the product.

Viewing 3D Imaging

WARNING

Viewing Environment

- **Viewing Time**
  When watching 3D contents, take 5 - 15 minute breaks every hour. Viewing 3D contents for a long period of time may cause headache, dizziness, fatigue or eye strain.

Those that have a photosensitive seizure or chronic illness

- Some users may experience a seizure or other abnormal symptoms when they are exposed to a flashing light or particular pattern from 3D contents.
- Do not watch 3D videos if you feel nausea, are pregnant and/ or have a chronic illness such as epilepsy, cardiac disorder, or blood pressure disease, etc.
- 3D Contents are not recommended to those who suffer from stereo blindness or stereo anomaly. Double images or discomfort in viewing may be experienced.
- If you have strabismus (cross-eyed), amblyopia (weak eyesight) or astigmatism, you may have trouble sensing depth and easily feel fatigue due to double images. It is advised to take frequent breaks than the average adult.
- If your eyesight varies between your right and left eye, revise your eyesight prior to watching 3D contents.

Symptoms which require discontinuation or refraining from watching 3D contents

- Do not watch 3D contents when you feel fatigue from lack of sleep, overwork or drinking.
- When these symptoms are experienced, stop using/watching 3D contents and get enough rest until the symptom subsides.
  » Consult your doctor when the symptoms persist. Symptoms may include headache, eyeball pain, dizziness, nausea, palpitation, blurriness, discomfort, double image, visual inconvenience or fatigue.

⚠ CAUTION

Viewing Environment

- **Viewing Distance**
  Maintain a distance of at least twice the screen diagonal length when watching 3D contents. If you feel discomfort in viewing 3D contents, move further away from the TV.

Viewing Age

- **Infants/Children**
  Usage/ Viewing 3D contents for children under the age of 5 are prohibited.
  Children under the age of 10 may overreact and become overly excited because their vision is in development (for example: trying to touch the screen or trying to jump into it. Special monitoring and extra attention is required for children watching 3D contents.
  Children have greater binocular disparity of 3D presentations than adults because the distance between the eyes is shorter than one of adults. Therefore they will perceive more stereoscopic depth compared to adults for the same 3D image.
- **Teenagers**
  Teenagers under the age of 19 may react with sensitivity due to stimulation from light in 3D contents. Advise them to refrain from watching 3D contens for a long time when they are tired.
- **Elderly**
  The elderly may perceive less 3D effect compared to the youth. Do not sit closer to the TV than the recommended distance.

Cautions when using the 3D glasses

- Make sure to use LG 3D glasses. Otherwise, you may not be able to view 3D videos properly.
- Do not use 3D glasses instead of your normal glasses, sunglasses or protective goggles.
- Using modified 3D glasses may cause eye strain or image distortion.
- Do not keep your 3D glasses in extremely high or low temperatures. It will cause deformation.
- The 3D glasses are fragile and are easy to be scratched. Always use a soft, clean piece of cloth when wiping the lenses. Do not scratch the lenses of the 3D glasses with sharp objects or clean/wipe them with chemicals.

NOTE

- Image shown may differ from your TV.
- Your TV's OSD (On Screen Display) may differ slightly from that shown in this manual.
- The available menus and options may differ from the input source or product model that you are using.
- New features may be added to this TV in the future.
- The TV can be placed in standby mode in order to reduce the power consumption. And the TV should be turned off if it will not be watched for some time, as this will reduce energy consumption.
- The energy consumed during use can be significantly reduced if the level of brightness of the picture is reduced, and this will reduce the overall running cost.

INSTALLATION PROCEDURE

1 Open the package and make sure all the accessories are included.

2 Attach the stand to the TV set.

3 Connect an external device to the TV set.

4 Make sure the network connection is available.
You can use the TV network functions only when the network connection is made.

ASSEMBLING AND PREPARING

Unpacking

Check your product box for the following items. If there are any missing accessories, contact the local dealer where you purchased your product.
The illustrations in this manual may differ from the actual product and item.

CAUTION

- Do not use any unapproved items to ensure the safety and product life span.
- Any damages or injuries by using unapproved items are not covered by the manufacturer's warranty.
- Some models have a thin film attached on to the screen and this must not be removed.

NOTE

- The items supplied with your product may vary depending on the model.
- Product specifications or contents of this manual may be changed without prior notice due to upgrade of product functions.
- For an optimal connection, HDMI cables and USB devices should have bezels less than 10 mm thick and 18 mm width. Use an extension cable that supports USB 2.0 if the USB cable or USB memory stick does not fit into your TV's USB port.

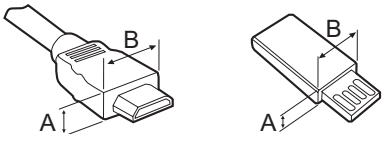

A ≦ 10 mm
B ≦ 18 mm

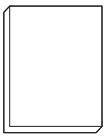

Owner's manual

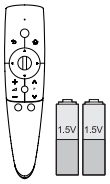

Magic remote control, **batteries** (AA)
(See p.30)

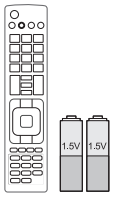

Remote control, **batteries** (AAA)
(See p.32)

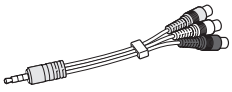

Composite video cable
(See p.27, 28)

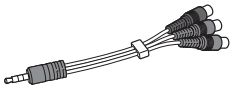

Component video cable
(See p.27)

Cinema 3D glasses
The number of 3D glasses may differ depending on the model or country.

Dual play glasses
(Depending on model)

Polishing cloth
(Depending on model)
Use this to remove dust from the cabinet.

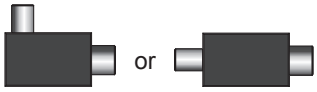

Isolator
(Depending on model)
(See p.15)

Only 47/55/60LM96

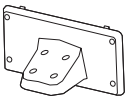

Stand body
(See p.18)

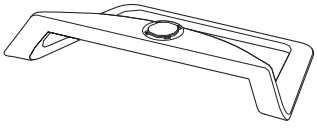

Stand base
(See p.18)

Stand screws
8 EA, M4 x 20
(See p.18)

Only 84LM96

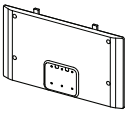

Stand body
(See p.19)

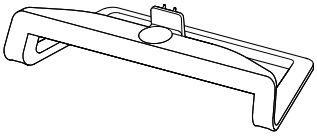

Stand base
(See p.19)

Stand screws
4 EA, M4 x 20 / 6 EA, M5 x 16
(See p.19)

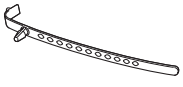

Cable holder
(Depending on model)
(See p.23)

CAUTION

- If there is a Isolator, follow as shown.
  - » Use this to install TV in a place where there is a voltage difference between TV set and GND of antenna signal. If there is a voltage difference between TV set and GND of antenna signal, the antenna contact might be heated and excessive heat might cause an accident.
  - » You can improve the safety when watching TV by efficiently removing power voltage from TV antenna. It is recommended to mount the isolator to the wall. If it cannot be mounted to the wall, mount it on the TV. Avoid disconnecting the antenna Isolator after installation.
  - » Before starting, be sure that the TV antenna is connected.

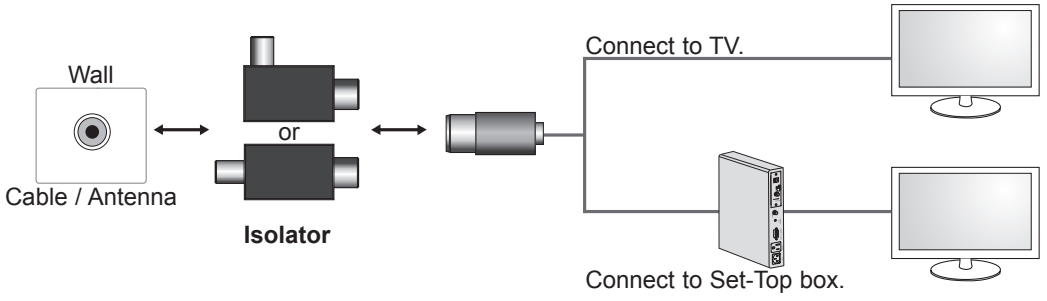

Connect one end of the isolator to cable/antenna jack and the other to TV set or set-top box.

"Equipment connected to the protective earthing of the building installation through the mains connection or through other equipment with a connection to protective earthing - and to a cable distribution system using coaxial cable, may in some circumstances create a fire hazard. Connection to a cable distribution system has therefore to be provided through a device providing electrical isolation below a certain frequency range (galvanic isolator, see EN 60728-11)"

When applying the RF Isolator, a slight loss of signal sensitivity can occur.

Separate purchase

Separate purchase items can be changed or modified for quality improvement without any notification.
Contact your dealer to buy these items.
These devices only work with certain models.

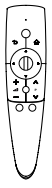

AN-MR300
Magic remote control

AG-F2**, **AG-F3****, **AG-F4****
Cinema 3D glasses

AG-F2DP**, **AG-F3**DP**
Dual play glasses

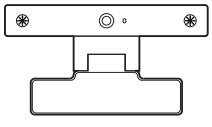

AN-VC***
Video call camera

The model name or design may be changed depending on the upgrade of product functions, manufacturer's circumstances or policies.

ENGLISH

Parts and buttons

60/84LM96

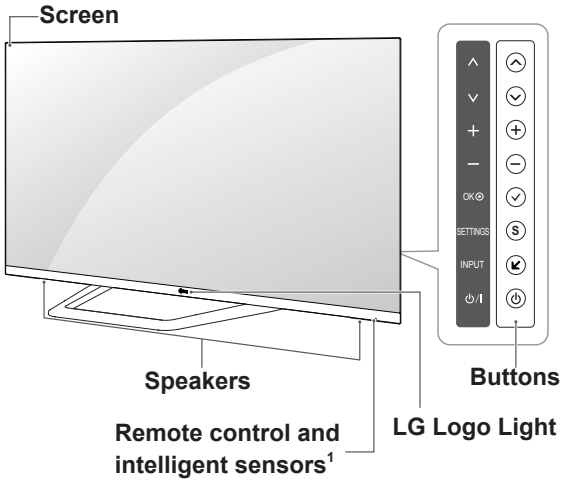

47/55LM96

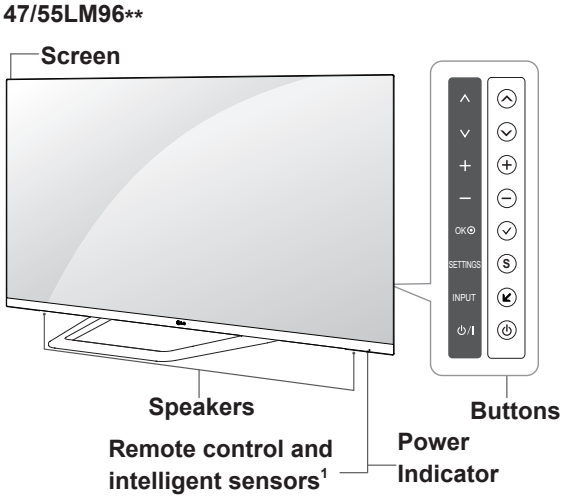

Button	Description
∧ ∨	Scrolls through the saved programmes.
+ −	Adjusts the volume level.
OK	Selects the highlighted menu option or confirms an input.
SETTINGS	Accesses the main menu, or saves your input and exits the menus.
INPUT	Changes the input source.
⏻/I	Turns the power on or off.

1 Intelligent sensor - Adjusts the image quality and brightness based on the surrounding environment.

NOTE

- You can set the power indicator light to on or off by selecting **OPTION** in the main menus. (Depending on model)

Lifting and moving the TV

Please note the following advice to prevent the TV from being scratched or damaged and for safe transportation regardless of its type and size.

CAUTION

- Avoid touching the screen at all times, as this may result in damage to the screen.

- It is recommended to move the TV in the box or packing material that the TV originally came in.
- Before moving or lifting the TV, disconnect the power cord and all cables.
- When holding the TV, the screen should face away from you to avoid damage.

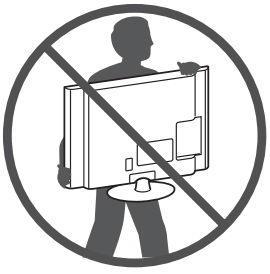

- Hold the top and bottom of the TV frame firmly. Make sure not to hold the transparent part, speaker, or speaker grill area.

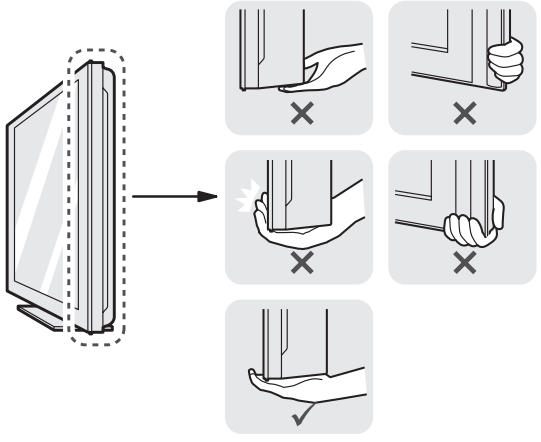

- When transporting a large TV, there should be at least 2 people.
- When transporting the TV by hand, hold the TV as shown in the following illustration.

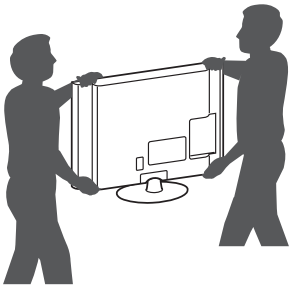

- When transporting the TV, do not expose the TV to jolts or excessive vibration.
- When transporting the TV, keep the TV upright, never turn the TV on its side or tilt towards the left or right.

ENGLISH

Setting up the TV

Image shown may differ from your TV.

Attaching the stand

47/55/60LM96****

1

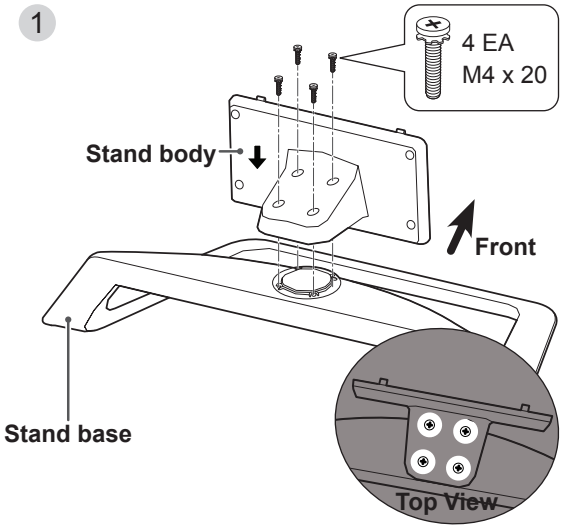

2

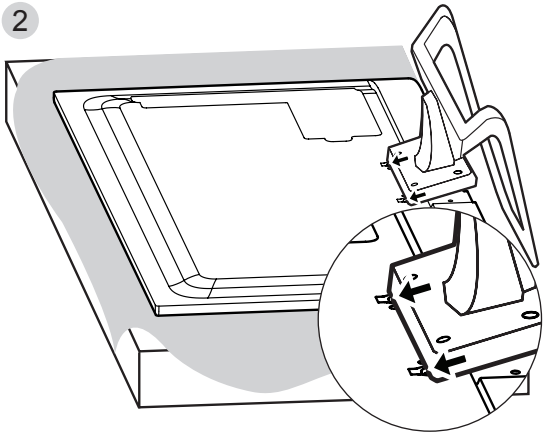

3

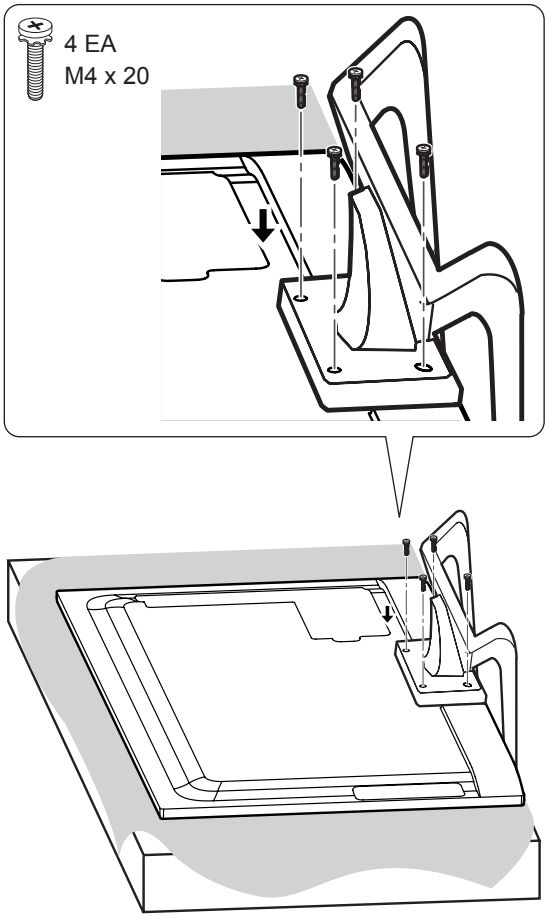

CAUTION

- When attaching the stand to the TV set, place the screen facing down on a cushioned table or flat surface to protect the screen from scratches.

CAUTION

- Make sure that the screws are inserted correctly and fastened securely. If they are not fastened securely enough, the TV may tilt forward after being installed.
- Do not use too much force and over tighten the screws; otherwise screw may be damaged and not tighten correctly.

NOTE

- Remove the stand before installing the TV on a wall mount by performing the stand attachment in reverse.

84LM96**

1

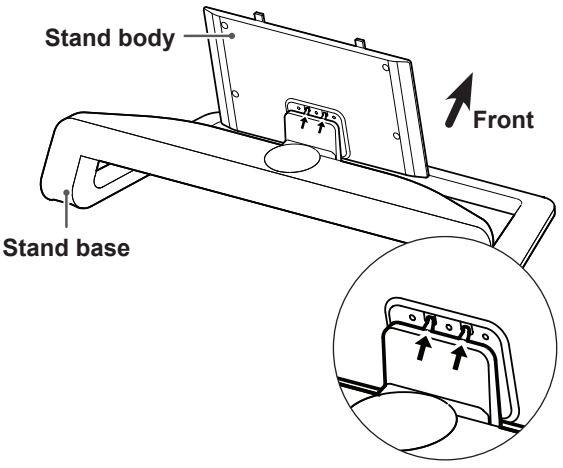

2

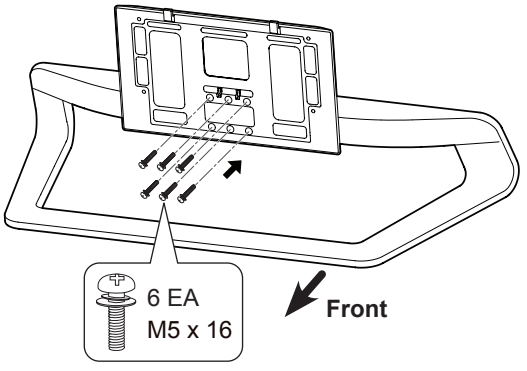

3

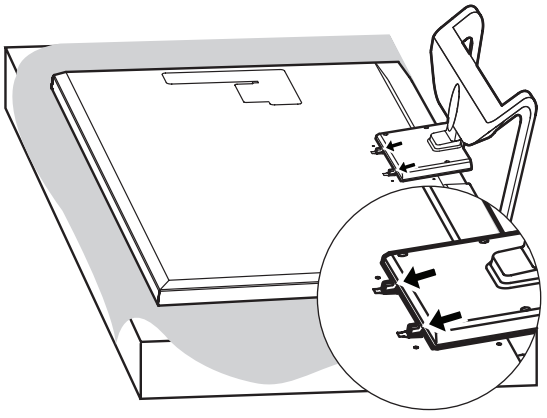

CAUTION

- When attaching the stand to the TV set, place the screen facing down on a cushioned table or flat surface to protect the screen from scratches.

4

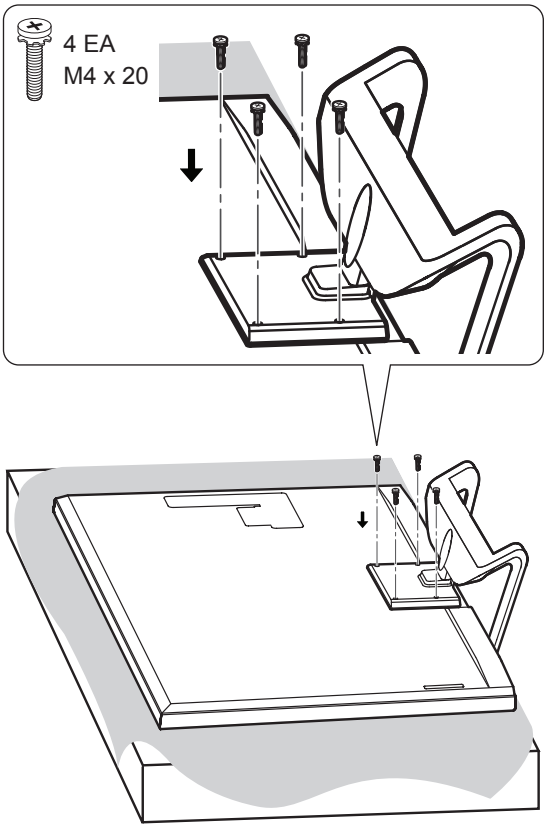

CAUTION

- Make sure that the screws are inserted correctly and fastened securely. If they are not fastened securely enough, the TV may tilt forward after being installed.
- Do not use too much force and over tighten the screws; otherwise screw may be damaged and not tighten correctly.

NOTE

- Remove the stand before installing the TV on a wall mount by performing the stand attachment in reverse.

Mounting on a table

1 Lift and tilt the TV into its upright position on a table.

- Leave a 10 cm (minimum) space from the wall for proper ventilation.

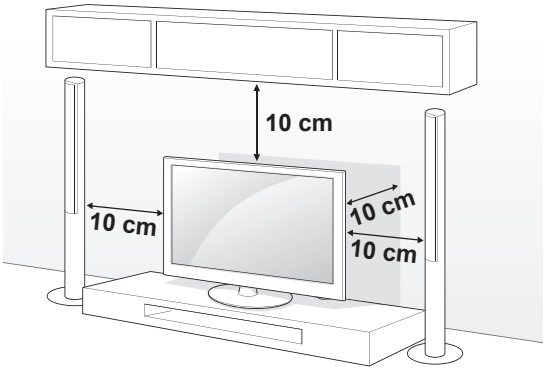

2 Connect the power cord to a wall outlet.

CAUTION

- Use a dedicated power cord. Do not modify or extend the power cord.
- Do not place the TV near or on sources of heat, as this may result in fire or other damage.

Adjusting the angle of the TV to suit view

47/55/60LM96**

Swivel 10 degrees to the left or right and adjust the angle of the TV to suit your view.

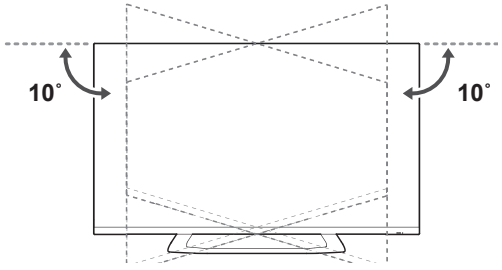

84LM96**

Swivel 7 degrees to the left or right and adjust the angle of the TV to suit your view.

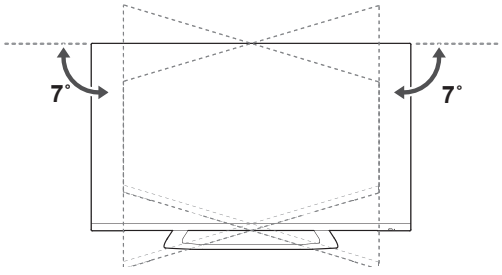

CAUTION

- When adjusting the angle of the product, watch out for your fingers.
  Personal injury may occur if hands or fingers are pinched. If the product is tilted too much, it may fall, causing damage or injury.

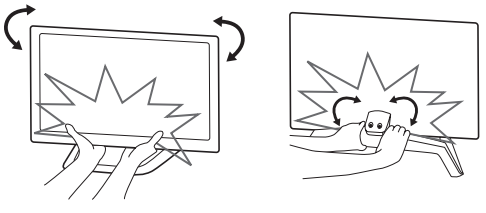

Front Rear

Securing the TV to a wall

This feature is not available for all models.

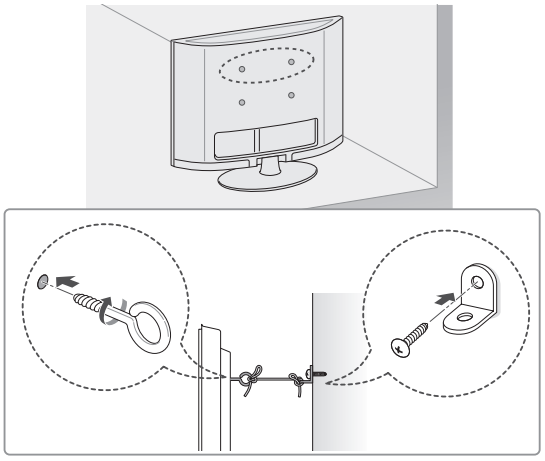

1 Insert and tighten the eye-bolts, or TV brackets and bolts on the back of the TV.
   - If there are bolts inserted at the eye-bolts position, remove the bolts first.

2 Mount the wall brackets with the bolts to the wall.
   Match the location of the wall bracket and the eye-bolts on the rear of the TV.

3 Connect the eye-bolts and wall brackets tightly with a sturdy rope.
   Make sure to keep the rope horizontal with the flat surface.

CAUTION

- Make sure that children do not climb on or hang on the TV.

NOTE

- Use a platform or cabinet that is strong and large enough to support the TV securely.
- Brackets, bolts and ropes are not provided. You can obtain additional accessories from your local dealer.

Mounting on a wall

Attach a wall mount bracket at the rear of the TV carefully and install the wall mount bracket on a solid wall perpendicular to the floor. When you attach the TV to other building materials, please contact qualified personnel.
LG recommends that wall mounting be performed by a qualified professional installer.

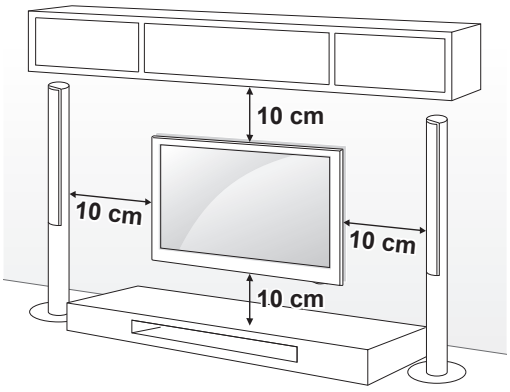

Make sure to use screws and wall mount bracket that meet the VESA standard. Standard dimensions for the wall mount kits are described in the following table.

Wall mount bracket

Model	47/55/60LM96**	84LM96**
VESA (A x B)	400 x 400	600 x 400
Standard screw	M6	M8
Number of screws	4	4
Wall mount bracket	LSW400BX 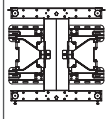 LSW420BX 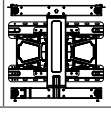	LSW600B 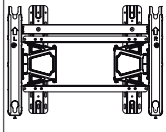

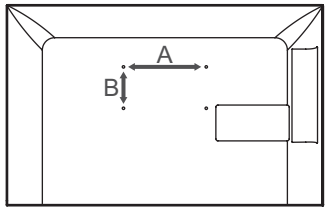

CAUTION

- Disconnect the power first, and then move or install the TV. Otherwise electric shock may occur.
- Use a dedicated power cord. Do not modify or extend the power cord.
- If you install the TV on a ceiling or slanted wall, it may fall and result in injury. Use an authorized LG wall mount bracket and contact the local dealer or qualified personnel.
- Do not over tighten the screws as this may cause damage to the TV and void your warranty.
- Use the screws and wall mount bracket that meet the VESA standard. Any damages or injuries by misuse or using an improper accessory are not covered by the manufacturer's warranty.

NOTE

- Use the screws that are listed on the VESA standard screw specifications.
- The wall mount kit includes an installation manual and necessary parts.
- The length of screws may differ depending on the wall mount. Make sure to use the proper length.
- For more information, refer to the manual supplied with the wall mount bracket.
- The wall mount bracket is not provided. You can obtain additional accessories from your local dealer.

Tidying cables

47/55/60LM96****

1 Gather and bind the cables with the cable management.

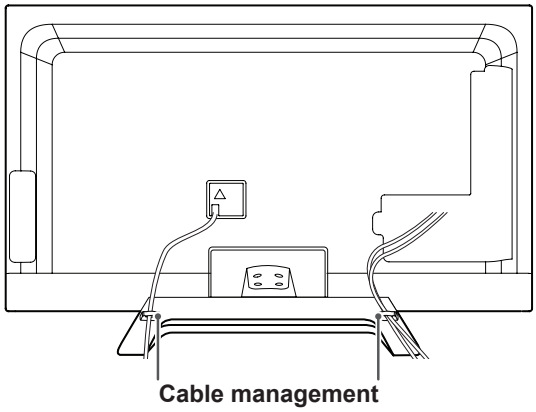

2 Gather and bind the cables with the cable holder on the TV back cover.

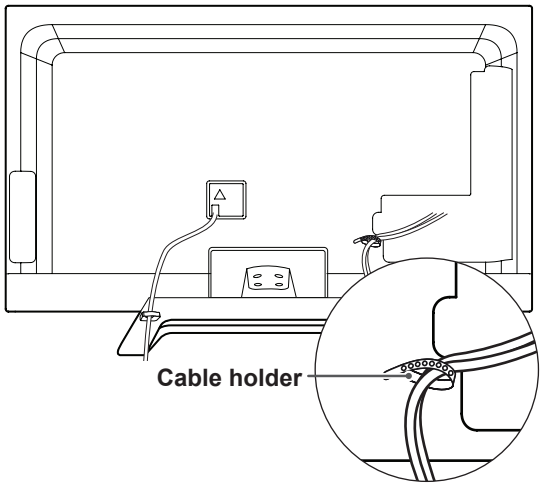

CAUTION

- Do not move the TV by holding the cable holder, as the cable holders may break, and injuries and damage to the TV may occur.

84LM96**

1 Gather and bind the cables with the cable management.

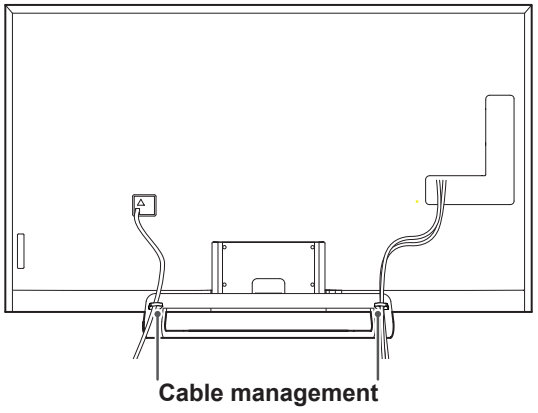

2 Install the cable holder as shown.

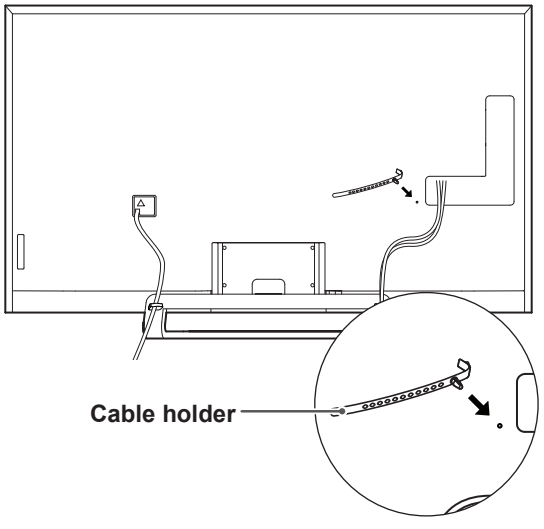

3 Gather and bind the cables with the cable holder.

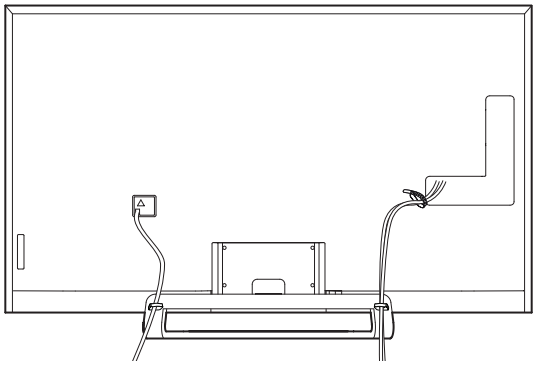

CAUTION

- Do not move the TV by holding the cable holder, as the cable holders may break, and injuries and damage to the TV may occur.

MAKING CONNECTIONS

This section on MAKING CONNECTIONS mainly uses diagrams for the 47/55LM96** models.

Connect various external devices to the TV and switch input modes to select an external device. For more information on external device's connection, refer to the manual provided with each device.
Available external devices are: HD receivers, DVD players, VCRs, audio systems, USB storage devices, PC, gaming devices, and other external devices.

NOTE

- The external device connection may differ from the model.
- Connect external devices to the TV regardless of the order of the TV port.
- If you record a TV program on a DVD recorder or VCR, make sure to connect the TV signal input cable to the TV through a DVD recorder or VCR. For more information of recording, refer to the manual provided with the connected device.
- Refer to the external equipment's manual for operating instructions.
- If you connect a gaming device to the TV, use the cable supplied with the gaming device.
- In PC mode, there may be noise associated with the resolution, vertical pattern, contrast or brightness. If noise is present, change the PC output to another resolution, change the refresh rate to another rate or adjust the brightness and contrast on the PICTURE menu until the picture is clear.
- In PC mode, some resolution settings may not work properly depending on the graphics card.

Antenna connection

Connect the TV to a wall antenna socket with an RF cable (75 Ω).

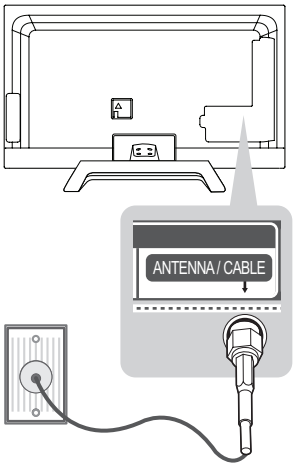

NOTE

- Use a signal splitter to use more than 2 TVs.
- If the image quality is poor, install a signal amplifier properly to improve the image quality.
- If the image quality is poor with an antenna connected, try to realign the antenna in the correct direction.
- An antenna cable and converter are not provided.

HDMI connection

Transmits the digital video and audio signals from an external device to the TV. Connect the external device and the TV with the HDMI cable as shown.

Choose any HDMI input port to connect. It does not matter which port you use.

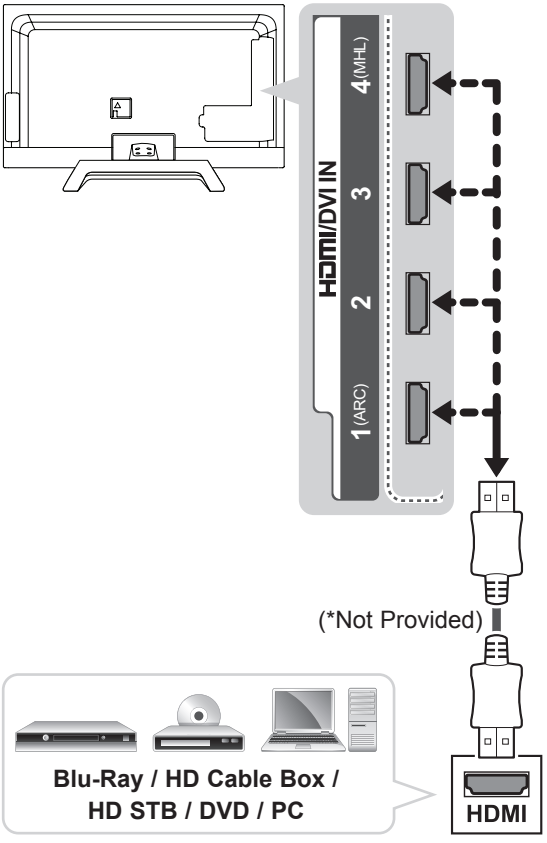

NOTE

- It is recommended to use the TV with the HDMI connection for the best image quality.
- Use the latest High Speed HDMI™ Cable with CEC (Customer Electronics Control) function.
- High Speed HDMI™ Cables are tested to carry an HD signal up to 1080p and higher.
- Supported DTV Audio:
  MPEG, Dolby Digital, Dolby Digital Plus, HE-AAC
- Supported HDMI Audio format :
  Dolby Digital, PCM (Up to 192 KHz, 32k/44.1k/48k /88k/96k/176k/192k, DTS Not supported.)

ARC (Audio Return Channel)

- An external audio device that supports SIMPLINK and ARC must be connected using HDMI/DVI IN 1 (ARC) port.
- When connected with a high-speed HDMI cable, the external audio device that supports ARC outputs optical SPDIF without additional optical audio cable and supports the SIMPLINK function.

DVI to HDMI connection

Transmits the digital video signal from an external device to the TV. Connect the external device and the TV with the DVI-HDMI cable as shown. To transmit an audio signal, connect an audio cable.

Choose any HDMI input port to connect. It does not matter which port you use.

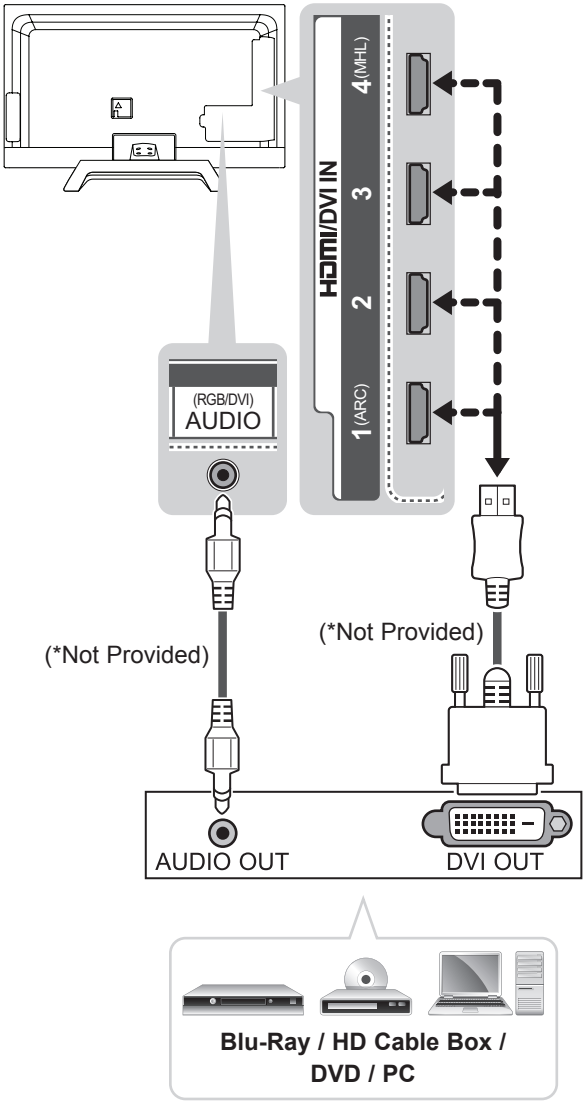

NOTE

- Depending on the graphics card, DOS mode may not work if a HDMI to DVI Cable is in use.

MHL connection

Mobile High-definition Link (MHL) is an interface for transmitting digital audiovisual signals from mobile phones to television sets.

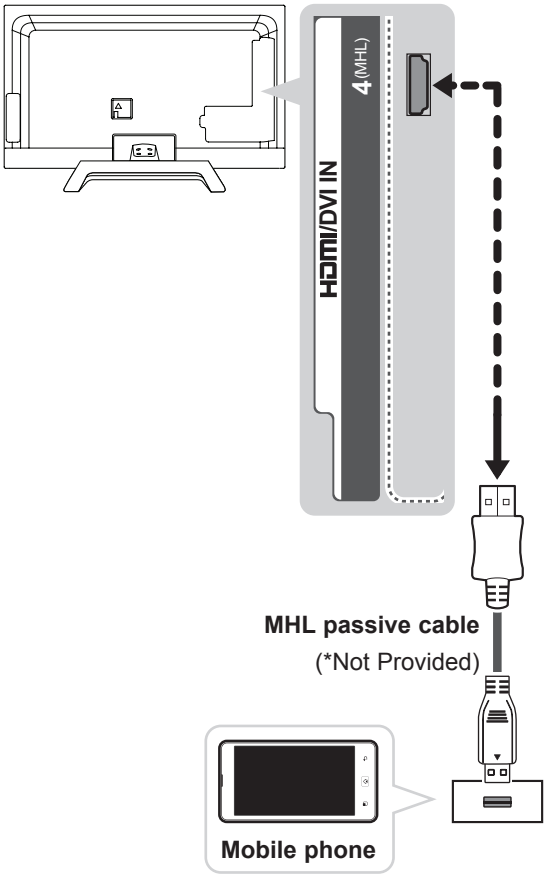

NOTE

- Connect the mobile phone to the HDMI/DVI IN 4 (MHL) port to view the phone screen on the TV.
- The MHL passive cable is needed to connect the TV and a mobile phone.
- This only works for the MHL-enabled phone.
- Some applications can be operated by the remote control.
- For some mobile phones supporting MHL, you can control with the magic remote control.

RGB-PC connection

Transmits the video signal from your PC to the TV. To transmit an audio signal, connect an audio cable.

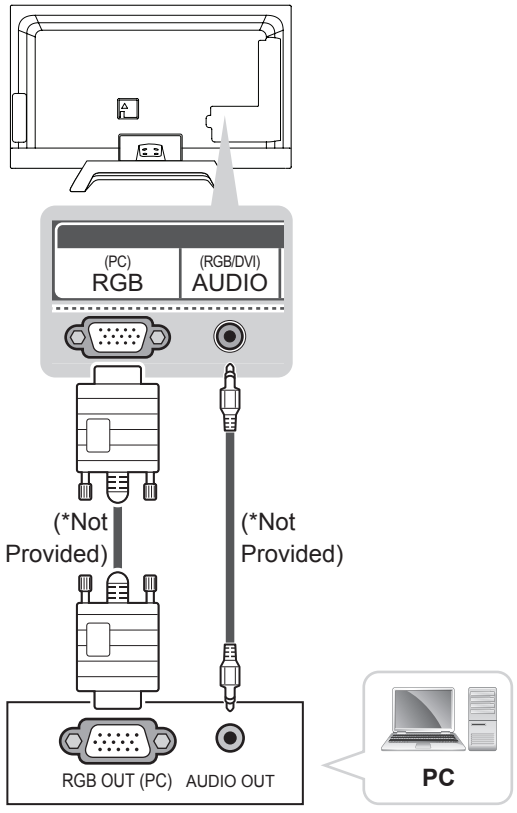

Component connection

Transmits analogue video and audio signals from an external device to the TV. Connect the external device and the TV with a component gender cable as shown.

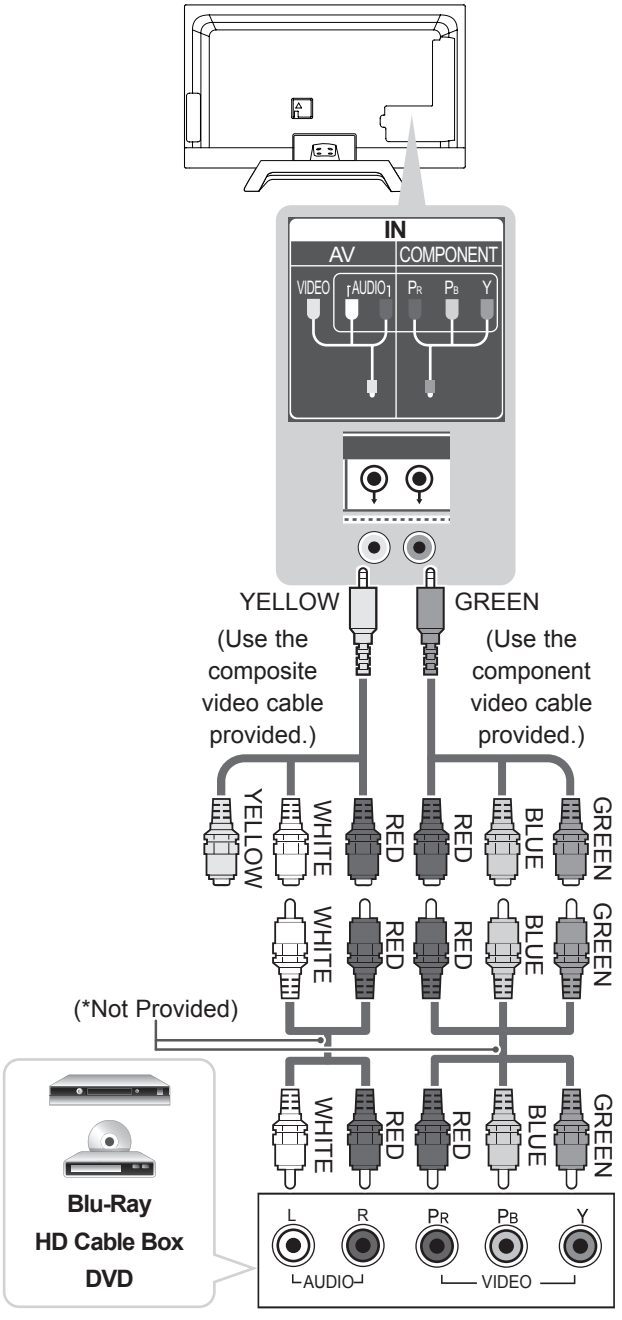

NOTE

- If cables are not installed correctly, it could cause this image to display in black and white or with distorted colours.

ENGLISH

Composite connection

Transmits analogue video and audio signals from an external device to the TV. Connect the external device and the TV with a composite gender cable as shown.

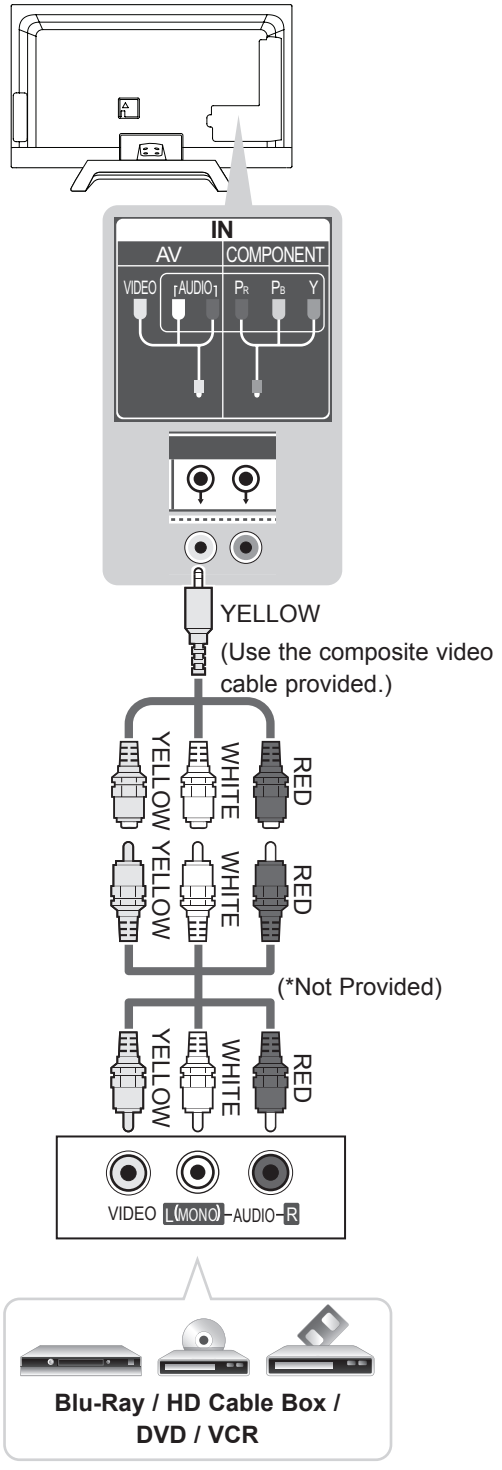

Audio connection

You may use an external audio system instead of the built-in speaker.

NOTE

- If you use an external audio device instead of the built-in speaker, set the TV speaker feature to off.

Digital optical audio connection

Transmits a digital audio signal from the TV to an external device. Connect the external device and the TV with the optical audio cable as shown.

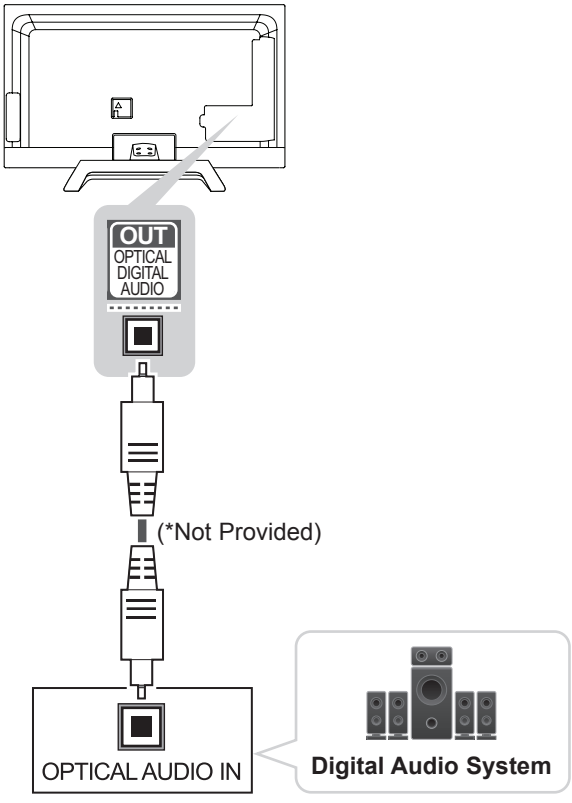

CAUTION

- Do not look into the optical output port. Looking at the laser beam may damage your vision.
- Audio with ACP (Audio Copy Protection) function may block digital audio output.

USB connection

Connect a USB storage device such as a USB flash memory, external hard drive or a USB memory card reader to the TV and access the Smart Share menu to use various multimedia files.

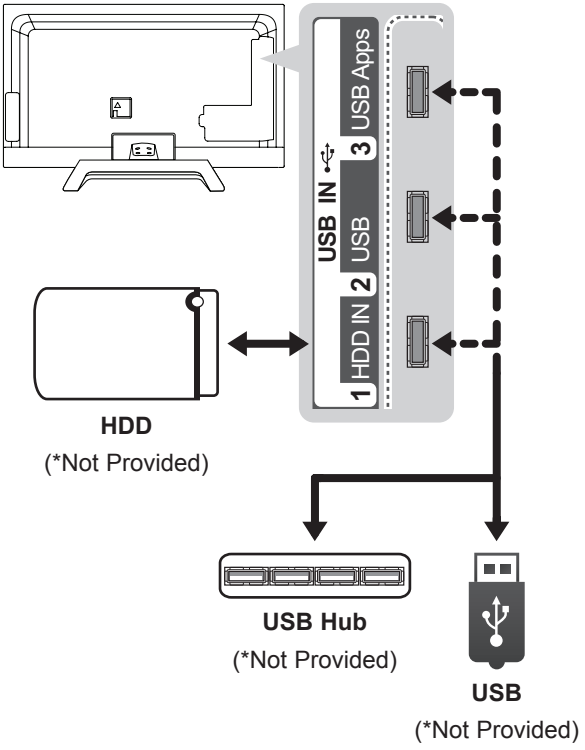

NOTE

- Some USB Hubs may not work. If a USB device connected using a USB Hub is not detected, connect it to the USB IN port on the TV directly.

MAGIC REMOTE CONTROL FUNCTIONS

When the message "Magic remote control battery is low. Change the battery." is displayed, replace the battery.
To replace batteries, open the battery cover, replace batteries (1.5 V AA) matching ⊕ and ⊖ ends to the label inside the compartment, and close the battery cover. Be sure to point the magic remote control toward the remote control sensor on the TV.
To remove the batteries, perform the installation actions in reverse.

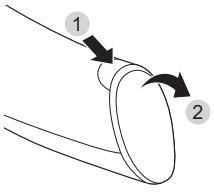

CAUTION

- Do not mix old and new batteries, as this may damage the magic remote control.

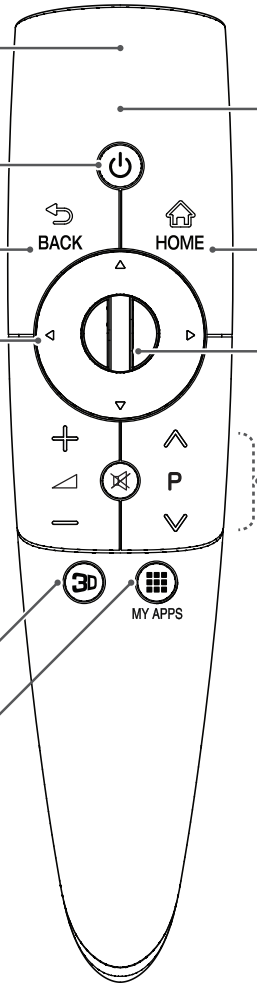

POINTER (RF Transmitter)

Voice Search
(Depending on model)

POWER
Turns the TV on or off.

BACK
Returns to the previous level.

HOME
Accesses the HOME menu.

Navigation Buttons
(△ UP ▽ DOWN ◁ LEFT ▷ RIGHT)
Scrolls through menus or options.

Wheel(OK)
Selects menus or options and confirms your input. Scrolls through the saved programmes.
If you press the navigation button while moving the pointer on the screen, the pointer disappears, and the magic remote control works as a regular remote control. To display the pointer again, shake the magic remote control from side to side.

Adjusts the volume level.

MUTE
Mutes all sounds.

P ∧ ∨
Scrolls through the saved programmes.

3D
Uses for viewing 3D video.

MY APPS
Shows the list of Apps.

Voice Search (Depending on model)
Network connection is required to use the voice search function.
The recognition rate may vary depending on the user's characteristics (voice, pronunciation, intonation and speed) and the environment (noise and TV volume).

1 Select the Voice Search icon on the screen.

2 Speak slowly and precisely. When a voice is recognized, the processing message appears on the screen.

- Use the magic remote control no further than 15 cm from your face.

Registering magic remote control

It is necessary to 'pair' (register) the magic remote control to your TV before it will work.

How to register the magic remote control

1 To register automatically, turn the TV on and press the **Wheel(OK)** button. When registration is completed, the completion message appears on the screen.

2 If registration fails, turn the TV off and back on, then press the **Wheel(OK)** button to complete registration.

How to re-register the magic remote control

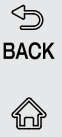

1 Press and hold the **BACK** and **HOME** buttons together for 5 seconds to reset, then register it by following "How to register the magic remote control" above.

2 To re-register the magic remote control, press and hold the **BACK** button for 5 seconds toward the TV.
When registration is completed, the completion message appears on the screen.

How to use magic remote control

1 If the pointer disappears, move the magic remote control slightly to left or right. Then, it will automatically appear on the screen.
» If the pointer has not been used for a certain period of time, it will disappear.

2 You can move the pointer by aiming the pointer receiver of the magic remote control at your TV then move it left, right, up or down.
» If the pointer does not work properly, leave the magic remote control for 10 seconds then use it again.

1	If you press **Wheel(OK)** on the magic remote control, the screen appears. Shows information about the current programme and screen.
2	Pressing this button will display number keypad which you can select programme number.
3	You can select My Apps Menu.

Precautions to take when using the magic remote control

- Use the magic remote control within the maximum communication distance (10 m). Using the magic remote control beyond this distance, or with an object obstructing it, may cause a communication failure.
- A communication failure may occur due to nearby devices. Electrical devices such as a microwave oven or wireless LAN product may cause interference, as these use the same bandwidth (2.4 GHz) as the magic remote control.
- The magic remote control may be damaged or may malfunction if it is dropped or receives a heavy impact.
- Take care not to bump into nearby furniture or other people when using the magic remote control.
- Manufacturer and installer cannot provide service related to human safety as the applicable wireless device has possibility of electric wave interference.
- It is recommended that an Access Point (AP) be located more than 1 m away from the TV. If the AP is installed closer than 1 m, the magic remote control may not perform as expected due to frequency interference.

ENGLISH

REMOTE CONTROL

To replace batteries, open the battery cover, replace batteries (1.5 V AAA) matching ⊕ and ⊖ ends to the label inside the compartment, and close the battery cover. Be sure to point the remote control toward the remote control sensor on the TV.
To remove the batteries, perform the installation actions in reverse.

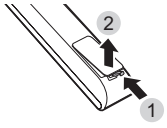

CAUTION

- Do not mix old and new batteries, as this may damage the remote control.
- In Analogue TV and some countries, some remote control buttons may not work.

POWER
Turns the TV on or off.

User Guide
Sees User Guide.

RATIO
Resizes an image.

INPUT
Changes the input source.

TV/RAD
Selects Radio, TV and DTV programme.

Number buttons
Enters numbers.

LIST
Accesses the saved programme list.

Q.VIEW
Returns to the previously viewed programme.

⊿ + −
Adjusts the volume level.

FAV
Accesses your favourite programme list.

3D
Uses for viewing 3D video.

MUTE
Mutes all sounds.

P ∧ ∨
Scrolls through the saved programmes.

PAGE
Moves to the previous or next screen.

SETTINGS
Accesses the main menu.

HOME
Accesses the HOME menu.

MY APPS
Shows the list of Apps.

Navigation Buttons
(∧ UP ∨ DOWN 〈 LEFT 〉 RIGHT)
Scrolls through menus or options.

OK
Selects menus or options and confirms your input.

BACK
Returns to the previous level.

GUIDE
Shows programme guide.

EXIT
Clears on-screen displays and return to TV viewing.

Coloured buttons (RED GREEN YELLOW BLUE)
These access special functions in some menus.

TELETEXT buttons (TEXT T.OPT)
These buttons are used for teletext.

SUBTITLE
Recalls your preferred subtitle in digital mode.

Q.MENU
Accesses the Quick menus.

LIVE TV
Return to the LIVE TV.

Control buttons (■ ▶ ❚❚ ◀◀ ▶▶)
Controls the Premium contents, DVR or Smart Share menus or the SIMPLINK compatible devices (USB or SIMPLINK or DVR).

REC
Uses to adjust DVR menu.

INFO
Views the information of the current programme and screen.

ENERGY SAVING
Adjusts the brightness of the screen to reduce energy consumption.

SIMPLINK
Accesses the AV devices connected with the HDMI cable through HDMI-CEC.
Opens the SIMPLINK menu.

USING THE USER GUIDE

User Guide allows you to more easily access the detailed TV information.

1 Press **HOME** button to access the Home menu.

2 Select **User Guide** and press **Wheel(OK)**.

User Guide

NOTE

- You can also access the User Guide by pressing **(User Guide)** button in the remote control.

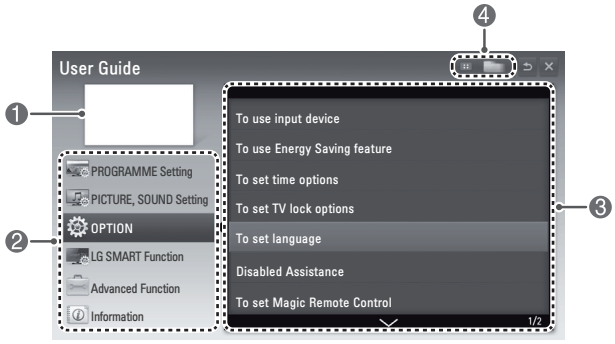

❶	Shows the current watching programme or input source screen.
❷	Allows to select the category you want.
❸	Allows to select the item you want. You can use ∧ ∨ to move between pages.
❹	Allows to browse the description of the function you want from the index.

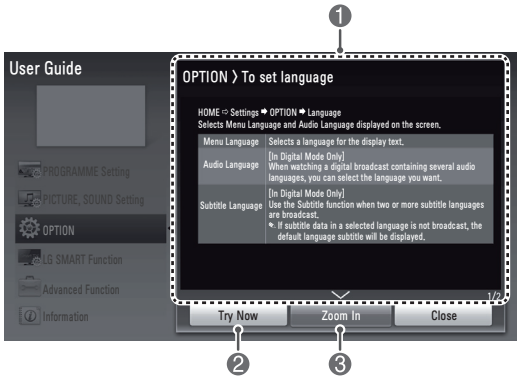

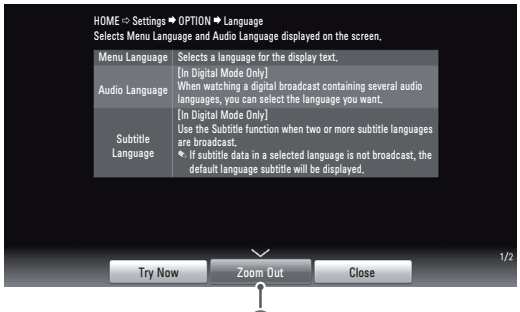

❶	Shows the description of the selected menu. You can use ∧ ∨ to move between pages.
❷	Moves to the selected menu directly from the User Guide.
❸	Zooms in or out the screen.

MAINTENANCE

Cleaning Your TV

Clean your TV regularly to keep the best performance and to extend the product lifespan.

CAUTION

- Make sure to turn the power off and disconnect the power cord and all other cables first.
- When the TV is left unattended and unused for a long time, disconnect the power cord from the wall outlet to prevent possible damage from lightning or power surges.

Screen, frame, cabinet and stand

To remove dust or light dirt, wipe the surface with a dry, clean, and soft cloth.
To remove major dirt, wipe the surface with a soft cloth dampened in clean water or a diluted mild detergent. Then wipe immediately with a dry cloth.

CAUTION

- Avoid touching the screen at all times, as this may result in damage to the screen.
- Do not push, rub, or hit the surface with your fingernail or a sharp object, as this may result in scratches on the screen and image distortions.
- Do not use any chemicals as this may damage the product.
- Do not spray liquid onto the surface. If water enters the TV, it may result in fire, electric shock, or malfunction.

Power cord

Remove the accumulated dust or dirt on the power cord regularly.

TROUBLESHOOTING

Problem	Solution
Cannot control the TV with the remote control.	• Check the remote control sensor on the product and try again. • Check if there is any obstacle between the product and the remote control. • Check if the batteries are still working and properly installed (⊕ to ⊕, ⊖ to ⊖).
No image display and no sound is produced.	• Check if the product is turned on. • Check if the power cord is connected to a wall outlet. • Check if there is a problem in the wall outlet by connecting other products.
The TV turns off suddenly.	• Check the power control settings. The power supply may be interrupted. • Check if the Auto sleep feature is activated in the Time settings. • If there is no signal while the TV is on, the TV will turn off automatically after 15 minutes of inactivity.
When connecting to the PC (RGB/HDMI DVI), 'No signal' or 'Invalid Format' is displayed.	• Turn the TV off/on using the remote control. • Reconnect the RGB/HDMI cable. • Restart the PC with the TV on.

SPECIFICATIONS

Product specifications may be changed without prior notice due to upgrade of product functions.

Wireless LAN module(WN8122E) specification	
Standard	IEEE802.11a/b/g/n
Frequency Range	2400 to 2483.5 MHz 5150 to 5250 MHz 5725 to 5850 MHz
Modulation	CCK / OFDM / MIMO
Output Power (Typical)	802.11a: 14 dBm 802.11b: 17 dBm 802.11g: 15 dBm 802.11n - 2.4GHz: 13.5 dBm 802.11n - 5GHz: 12 dBm
Data rate	802.11a/g: 54 Mbps 802.11b: 11 Mbps 802.11n: 300 Mbps
Antenna Gain (Typical)	2400 to 2483.5 MHz: -0.79dBi 5150 to 5250 MHz: 0.62dBi 5725 to 5850 MHz: 0.52dBi
Occupied bandwidth	802.11a/b/g: HT20 802.11n: HT20/40
• Because band channel used by the country could be different, the user can not change or adjust the operating frequency and this product is set for the regional frequency table.	

Bluetooth module (BM-LDS302) specification	
Standard	Bluetooth Version 3.0
Frequency Range	2400 ~ 2483.5 MHz
Output Power (Max.)	10 dBm or lower
Data rate (Max.)	3 Mbps
Communication Distance	Line of Open Sight approx. 10 m

MODEL		47LM96**	55LM96**
		47LM9600-TA / 47LM960Y-TA	55LM9600-TA / 55LM960Y-TA
Dimensions (W x H x D)	With stand (mm)	1053.0 x 687.0 x 264.0	1223.0 x 784.0 x 331.0
	Without stand (mm)	1053.0 x 612.0 x 37.9	1223.0 x 708.0 x 38.4
Weight	With stand (kg)	17.6	24.2
	Without stand (kg)	15.3	20.6
Power requirement		AC 100-240 V~ 50 / 60 Hz	AC 100-240 V~ 50 / 60 Hz
MODEL		**60LM96****	**84LM96****
		60LM9600-TA / 60LM960Y-TA	84LM9600-TA / 84LM960Y-TA
Dimensions (W x H x D)	With stand (mm)	1346.0 x 862.0 x 331.0	1916.0 x 1214.0 x 399.0
	Without stand (mm)	1346.0 x 784.0 x 41.2	1916.0 x 1120.0 x 39.9
Weight	With stand (kg)	31.5	81.7
	Without stand (kg)	27.9	70.4
Power requirement		AC 100-240 V~ 50 / 60 Hz	AC 100-240 V~ 50 / 60 Hz

For the power supply and power consumption, refer to the label attached to the product.

Environment condition	Operating Temperature	0 °C to 40 °C
	Operating Humidity	Less than 80 %
	Storage Temperature	-20 °C to 60 °C
	Storage Humidity	Less than 85 %

		Digital TV	Analogue TV
New Zealand, Singapore	Television System	DVB-T	PAL/SECAM-B/G/D/K, PAL-I
	Programme Coverage	UHF 21 to 69	BG : VHF/UHF 1 to 69, CATV 01 to 47 I : VHF/UHF 1 to 69, CATV 01 to 47 DK : VHF/UHF 1 to 69, CATV 01 to 47
Australia	Television System	DVB-T	PAL B/B
	Programme Coverage	VHF 06 to 12, UHF 27 to 69	B/B : VHF/UHF 0 to 75, CATV : 2 to 44
Indonesia, Israel, Myanmar, Sri Lanka	Television System	DVB-T	PAL/SECAM-B/G/D/K, PAL-I, NTSC-M
	Programme Coverage	UHF 21 to 69	BG : VHF/UHF 1 to 69, CATV 01 to 47 I : VHF/UHF 1 to 69, CATV 01 to 47 DK : VHF/UHF 1 to 69, CATV 01 to 47 M : VHF/UHF 2 to 78, CATV 01 to 71
Vietnam, Malaysia	Television System	DVB-T	PAL/SECAM-B/G/D/K, PAL-I, NTSC-M
	Programme Coverage	VHF 6 to 12, UHF 21 to 69	BG : VHF/UHF 1 to 69, CATV 01 to 47 I : VHF/UHF 1 to 69, CATV 01 to 47 DK : VHF/UHF 1 to 69, CATV 01 to 47 M : VHF/UHF 2 to 78, CATV 01 to 71
Iran, Algeria, Tunisia, Digital model	Television System	DVB-T	PAL/SECAM-B/G/D/K, PAL-I, NTSC-M
	Programme Coverage	VHF 5 to 12, UHF 21 to 69	BG : VHF/UHF 1 to 69, CATV 01 to 47 I : VHF/UHF 1 to 69, CATV 01 to 47 DK : VHF/UHF 1 to 69, CATV 01 to 47 M : VHF/UHF 2 to 78, CATV 01 to 71
Analogue model, India, Thailand, South Africa, --	Television System	-	PAL/SECAM-B/G/D/K, PAL-I, NTSC-M
	Programme Coverage	-	BG : VHF/UHF 1 to 69, CATV 01 to 47 I : VHF/UHF 1 to 69, CATV 01 to 47 DK : VHF/UHF 1 to 69, CATV 01 to 47 M : VHF/UHF 2 to 78, CATV 01 to 71
	External Antenna Impedance	75 Ω	75 Ω

HDMI/DVI-DTV supported mode

Resolution	Horizontal Frequency (kHz)	Vertical Frequency (Hz)
720x480	31.469	59.94
	31.5	60
720x576	31.25	50
1280x720	37.5	50
	44.96	59.94
	45	60
1920x1080	33.72	59.94
	33.75	60
	28.125	50
	26.97	23.97
	27	24
	33.716	29.976
	33.75	30.00
	56.25	50
	67.43	59.94
	67.5	60
3840x2160 (Only 84LM96**)	53.95	23.976
	54	24.00
	56.25	25
	61.43	29.970
	67.5	30.00

Component port connecting information

Component ports on the TV	Y	P_B	P_R

Video output ports on DVD player	Y	P_B	P_R
	Y	B-Y	R-Y
	Y	Cb	Cr
	Y	Pb	Pr

Signal	Component
480i/576i	O
480p/576p	O
720p/1080i	O
1080p	O (50 Hz / 60 Hz only)

3D supported mode

- Video, which is input as below media contents is switched into the 3D screen automatically.

3D supported mode automatically				
Input	Signal	Horizontal Frequency (kHz)	Vertical Frequency (Hz)	Playable 3D video format
HDMI	640x480	31.469 / 31.5	59.94 / 60	Side by Side(Half), Top & Bottom, Side by Side(Full)
		62.938 / 63		Frame Packing, Line Alternative
	480p	31.469 / 31.5		Side by Side(Half), Top & Bottom, Side by Side(Full)
		62.938 / 63		Frame Packing, Line Alternative
	576p	31.25	50	Side by Side(Half), Top & Bottom, Side by Side(Full)
		62.5		Frame Packing, Line Alternative
	720p	37.50	50	Side by Side(Half), Top & Bottom, Side by Side(Full)
		44.96 / 45	59.94 / 60	
		75	50	Frame packing, Line Alternative
		89.91 / 90	59.94 / 60	
	1080i	28.125	50	Side by Side(Half), Top & Bottom, Side by Side(Full)
		33.72 / 33.75	59.94 / 60	
		56.25	50	Frame packing, Field Alternative
		67.50	59.94 / 60	
	1080p	26.97 / 27	23.97 / 24	Side by Side(Half), Top & Bottom, Side by Side(Full)
		28.125	25	
		33.72 / 33.75	29.976 / 30	
		43.94 / 54	23.97 / 24	Frame packing, Line Alternative
		56.25	25	
		67.432 / 67.5	29.976 / 30	
		56.25	50	Side by Side(Half), Top & Bottom
		67.432 / 67.5	59.94 / 60	
USB	1080p	33.75	30	Side by Side(Half), Top & Bottom, Checker Board, MPO(Photo), JPS(Photo)
DLNA	1080p	33.75	30	

• For models supporting WiDi, you can set the 3D mode in the same way as in RGB (PC) mode.

3D supported mode manually				
Input	Signal	Horizontal Frequency (kHz)	Vertical Frequency (Hz)	Playable 3D video format
HDMI-DTV	720p	37.50	50	2D to 3D, Side by Side(Half), Top & Bottom, Single Frame Sequential
		45.00	60	
	1080i	28.12	50	2D to 3D, Side by Side(Half), Top & Bottom
		33.75	60	
	1080p	27.00	24	2D to 3D, Side by Side(Half), Top & Bottom, Checker Board
		28.12	25	
		33.75	30	
		56.25	50	2D to 3D, Side by Side(Half), Top & Bottom, Checker Board, Single Frame Sequential, Row Interleaving, Column Interleaving
		67.50	60	
	Others (Only 84LM96**)	-	-	2D to 3D
HDMI-PC	1024x768	48.36	60	2D to 3D, Side by Side(Half), Top & Bottom
	1360x768	47.71		
	1920x1080	67.50		2D to 3D, Side by Side(Half), Top & Bottom, Checker Board, Single Frame Sequential, Row Interleaving, Column Interleaving
	Others	-	-	2D to 3D
RGB-PC	1024x768	48.36	60	2D to 3D, Side by Side(Half), Top & Bottom
	1360x768	47.71		
	1920x1080	67.50		
	Others	-	-	2D to 3D
Component	720p	37.50	50	2D to 3D, Side by Side(Half), Top & Bottom
		45.00	60	
	1080i	28.12	50	
		33.75	60	
	1080p	27.00	24	
		28.12	25	
		33.75	30	
		56.25	50	
		67.50	60	
	Others	-	-	2D to 3D
USB	1080p	33.75	30	2D to 3D, Side by Side(Half), Top & Bottom, Checker Board, Row Interleaving, Column Interleaving [Photo : Side by Side(Half), Top & Bottom]
DLNA	1080p	33.75	30	
	Signal			Playable 3D video format
DTV	HD			2D to 3D, Side by Side(Half), Top & Bottom
	SD			2D to 3D

For any suggestion, opinion, complaints, please call
800 54 in UAE
0800 54 54 54 in South Africa
080 100 54 54 in Morocco
19960 in Egypt.
Other countries, please contact our local dealer or log into http://www.lg.com

Record the model number and serial number of the TV.
Refer to the label on the back cover and quote this information to your dealer when requiring any service.

MODEL _____

SERIAL _____

(Only DTV)