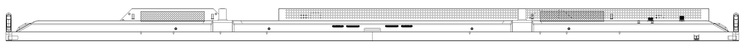

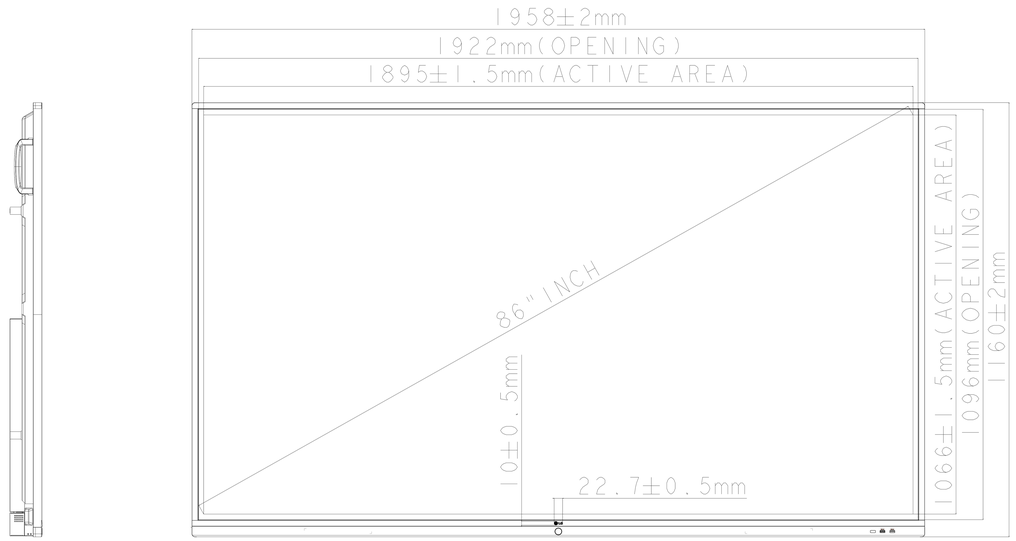
1958±2mm
1922mm(OPENING)
1895±1.5mm(ACTIVE AREA)
86" INCH
1066±1.5mm(ACTIVE AREA)
1096mm(OPENING)
1160±2mm
10±0.5mm
22.7±0.5mm

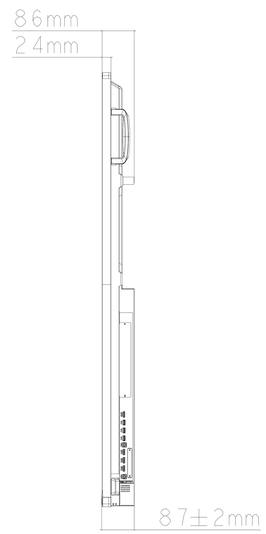
86mm
24mm
87±2mm

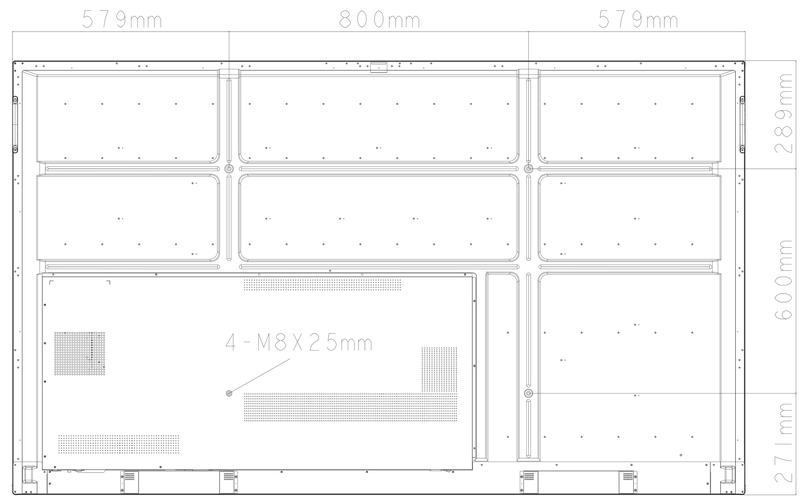
579mm
800mm
579mm
289mm
600mm
271mm
4-M8X25mm