30″ Gas Cooktop with UltraHeat™ Burner

LG STUDIO

- Integrated, Pro-Style Design
- 5 Sealed Burners
- EasyClean® Cooktop
- Dual Stacked UltraHeat™ 24,000 BTU Center Burner (650 BTU Simmer)
- 3 Heavy-Duty Continuous Cast Iron Grates (Dishwasher Safe)
- Illuminated Metal Knobs
- Gas Lock / Child Lock
- Griddle Plate Included

ADA COMPLIANT

COLOR AVAILABILITY
CBGS3028S – PrintProof™ Stainless Steel

COOKTOP FEATURES	
Number of Sealed Burners	5
Burner BTU (NG / LP)	
Left Front	10,000 / 7,500
Left Rear	10,000 / 7,500
Center	24,000 / 16,000 (UltraHeat™)
Right Front	13,500 / 14,000
Right Rear	5,000 / 4,000
Griddle Plate	Yes
Continuous Grates	Yes
Dishwasher Safe Grates	Yes
Gas Lock / Child Lock	Yes
EasyClean® Cooktop	Yes
ADA Compliant	Yes

CONTROLS	
Cooktop Control Type	Front, Metal Knob Control
Knob Lighting	Yes (LED)

SMART FEATURES	
Wi-Fi Enabled	Yes
ThinQ® Technology	Yes

FINISHES AND APPEARANCE	
Cooktop Surface	PrintProof™ Stainless Steel
Knobs	Stainless Steel Appearance

TECHNICAL SPECS	
Fuel Type	NG / LP
Required Power Supply	120V, 60 Hz
Minimum Circuit Rating	15 Amp
Power Cord Type	3-Prong Cord Attached to Unit
Gas Supply Location	See Installation Diagram

INCLUDED ACCESSORIES
Griddle Plate, LP Conversion Kit

DIMENSIONS / CLEARANCES / WEIGHTS	
Product Dimensions (W x H x D)	30" x 3 3/4" x 21 11/16"
Cutout Dimensions (W x H x D)	28 1/2" x 19 11/16"
Minimum Spacing to Back Wall	2 3/4"
Minimum Spacing to Side Walls	11 13/16"
Minimum Front Countertop Clearance	1 5/8"
Carton Dimensions (W x H x D)	33 31/32" x 9 17/32" x 25 25/64"
Approx. Weight (Product / Carton)	67.77 lbs. / 58.93 lbs.

LIMITED WARRANTY	
Parts and Labor	2 Years

DIMENSIONS / CLEARANCES

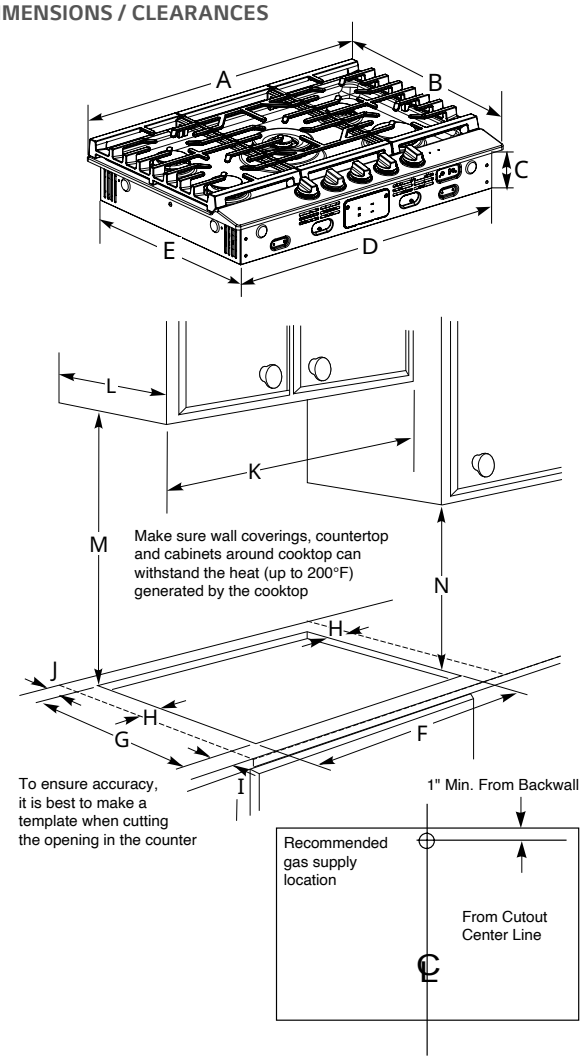

DIMENSIONS / CLEARANCES		
A	Width of upper plate	30" (762 mm)
B	Depth of upper plate	21 11/16" (550.9 mm)
C	Height of cooktop base	3 3/4" (95.3 mm)
D	Width of cooktop base	28 1/4" (717.6 mm)
E	Depth of cooktop base	19 3/8" (492.1 mm)
F	Width of cutout	28 1/2" (723.9 mm)
G	Depth of cutout	19 11/16" (500.1 mm)
H	Distance from cutout to side wall on the left of unit. / Distance from cutout to side wall on the right of the unit.	11 13/16" (300 mm)
I	Distance from front edge of cutout to front edge of countertop	1 5/8" (41.3 mm)
J	Distance between cutout and the wall behind the cooktop	2 3/4" (69.9 mm)
K	Width of unprotected overhead cabinets	30" (762 mm)
L	Depth of unprotected overhead cabinets	13" (330.2 mm)
M	Clearance from countertop to unprotected overhead surface	30" (762 mm)
N	Clearance from countertop to nearest cabinet on either side of unit	18" (457.2 mm)

INSTALLATION NOTES

- Provide enough clearance between the cooktop and adjacent combustible surfaces. These dimensions must be met for safe use of your cooktop.
- The location of the electrical outlet and pipe opening may be adjusted to meet specific requirements.
- The cooktop may be placed with 2 3/4" clearance to the back wall.

INSTALLATION OF COOKTOP

Locate the electrical outlet and gas shut-off valve beneath the cabinet. Never reuse old flexible connectors. Install a manual shut-off valve ❷ in the gas line in an easily accessible location outside the cooktop. Be sure you know how and where to shut off the gas supply to the cooktop. Install the electrical outlet 12˝ ❶ below the countertop.

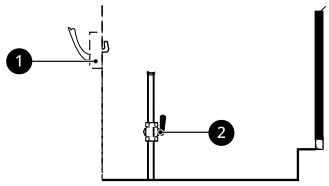

Carefully lower the cooktop into the countertop cutout, making sure not to trap any wires.

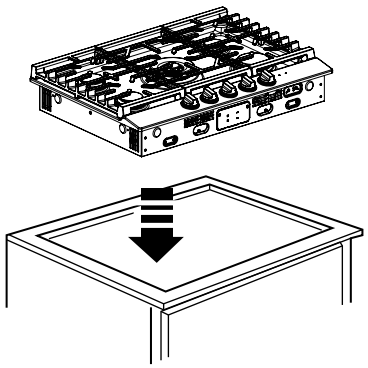

Remove the retainer brackets from the literature package.

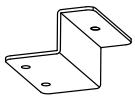

Install the retainer brackets ❶ to the bottom of the cooktop unit ❸. then snug the screws ❷ against the bottom of the countertop ❹ as shown.

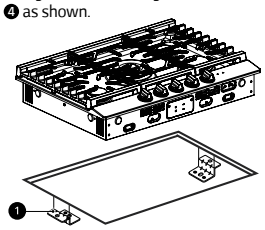

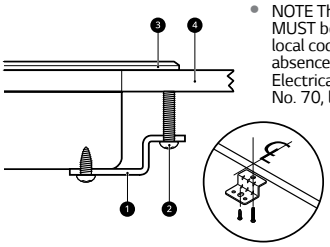

- NOTE The retainer brackets MUST be installed to meet local codes or, in their absence, the National Electrical Code ANSI/NFPA No. 70, latest edition.

LG Business Solutions

© 2022 LG Electronics USA, Inc. All rights reserved. "LG Life's Good" is a registered trademark of LG Corp. All other product and brand names are trademarks or registered trademarks of their respective owners. Design, features and specifications are subject to change without notice. Non-metric weights and measurements are approximate. Some features may require Internet access. Content and services may vary by product and are subject to change without notice.